REV. | LERA LESLIE E. ROBERTSON ASSOCIATES, RLLP CONSULTING STRUCTURAL ENGINEERS | P | DRAWING NO.

DRAFT

DESIGN

CHECK

WTC

DRAWING

BOOK

1/

Box 5

Book 11

SKILLING, HELLE, CHRISTIANSEN, ROBERTSON — Structural & Civil Engineers

PROJECT	THE WORLD TRADE CENTER	TITLE	DRAWING BOOK 11	DATE	10/ 6/72

REVISIONS

INTED 5/18/73

WTCI-33-LERA

11-JKQ-	0	5/18/73	11-JK2- 37	5/ 1/68	
11-JKF-	0	[illegible]	11-JK2- 38	5/ 1/68	
11- J1-	2	[illegible]	11-JK2- 39	5/ 1/68	
11- J1-	3	4/18/69	11-JK2- 40	5/ 1/68	
11- J1-	4	4/26/68	11-JK2- 41	5/ 1/68	
11- J1-	5	4/18/69	11-JK2- 42	5/ 1/68	
11- J1-	6	5/ 1/68	11-JK2- 43	5/ 1/68	
11- J1-	7	5/ 1/68	11-JK2- 44	5/ 1/68	
11- J1-	8	5/ 1/68	11-JK2- 45	5/ 1/68	
11- J1-	9	5/ 1/68	11-JK2- 46	6/ 7/68	
11- J1-	10	6/ 7/68	11-JK2- 47	6/ 7/68	
11- J1-	11	6/ 7/68	11-JK2- 48	12/ 3/68	
11- K1-	26	3/21/69	11-JK2- 49	6/ 7/68	
11-JK2-	2	4/18/69	11-JK2- 50	12/ 3/68	
11-JK2-	3	4/26/68	11-JK2- 51	6/ 7/68	
11-JK2-	4	4/26/68	11-JK2- 52	6/ 7/68	
11-JK2-	5	4/26/68	11-JK2- 53	6/ 7/68	
11-JK2-	6	4/18/69	11-JK2- 54	6/ 7/68	
11-JK2-	7	4/26/68	11-JK2- 55	6/ 7/68	
11-JK2-	8	4/18/69	11-JK2- 56	9/ 4/68	
11-JK2-	9	4/26/68	11-JK2- 57	10/15/68	
11-JK2-	10	4/18/69	11-JK2- 58	3/21/69	
11-JK2-	11	4/26/68	11-JK2- 59	9/ 4/68	
11-JK2-	12	4/18/69	11-JK2- 60	3/21/69	
11-JK2-	13	4/18/69	11-JK2- 61	9/ 4/68	
11-JK2-	14	4/18/69			
11-JK2-	14A	4/18/69			
11-JK2-	14B	4/18/69			
11-JK2-	15	4/26/68			
11-JK2-	16	4/18/69			
11-JK2-	17	4/26/68			
11-JK2-	18	4/26/68			
11-JK2-	19	4/ 5/68			
11-JK2-	20	4/26/68			
11-JK2-	21	4/18/69			
11-JK2-	22	5/ 1/68			
11-JK2-	23	4/18/69			
11-JK2-	24	5/ 1/68			
11-JK2-	25	5/ 1/68			
11-JK2-	26	5/ 1/68			
11-JK2-	27	5/ 1/68			
11-JK2-	28	5/ 1/68			
11-JK2-	29	5/ 1/68			
11-JK2-	30	5/ 1/68			
11-JK2-	31	5/ 1/68			
11-JK2-	32	5/ 1/68			
11-JK2-	33	5/ 1/68			
11-JK2-	34	5/ 1/68			
11-JK2-	35	5/ 1/68			
11-JK2-	36	5/ 1/68			

LICENSED PROFESSIONAL ENGINEER LESLIE E. ROBERTSON 34960 STATE OF NEW YORK

11-JK0- 0

SKILLING - HELLE - CHRISTIANSEN - ROBERTSON

PROJECT: THE WORLD TRADE CENTER

TITLE: DRAFTING INDEX

DATE: 5/15/67

REVISIONS

10-20-67
4- 5-68
4-26-68
5- 1-68
6- 7-68
9- 4-68
10-15-68
1- 3-69
2- 3-69
3- 3-69
3-21-69
4-1-69
Printed 5-1-69

DRAWING NO.	TITLE
11-JK1-0	Drawing Index
11-J1-2 Thru 11	Truss Elevation (Zone J)
11-K1-26	Truss Elevation (Zone K)
11-JK2-2 Thru 61	Truss Details

LICENSED PROFESSIONAL ENGINEER
LESLIE E. ROBERTSON
No. 34360
UNIVERSITY OF THE STATE OF NEW YORK

11-JK1-0

SKILLING HELLE CHRISTIANSEN

PROJECT [illegible]

DATE 6-15-67

REVISIONS

4-5-68

4-26-68

4-18-69

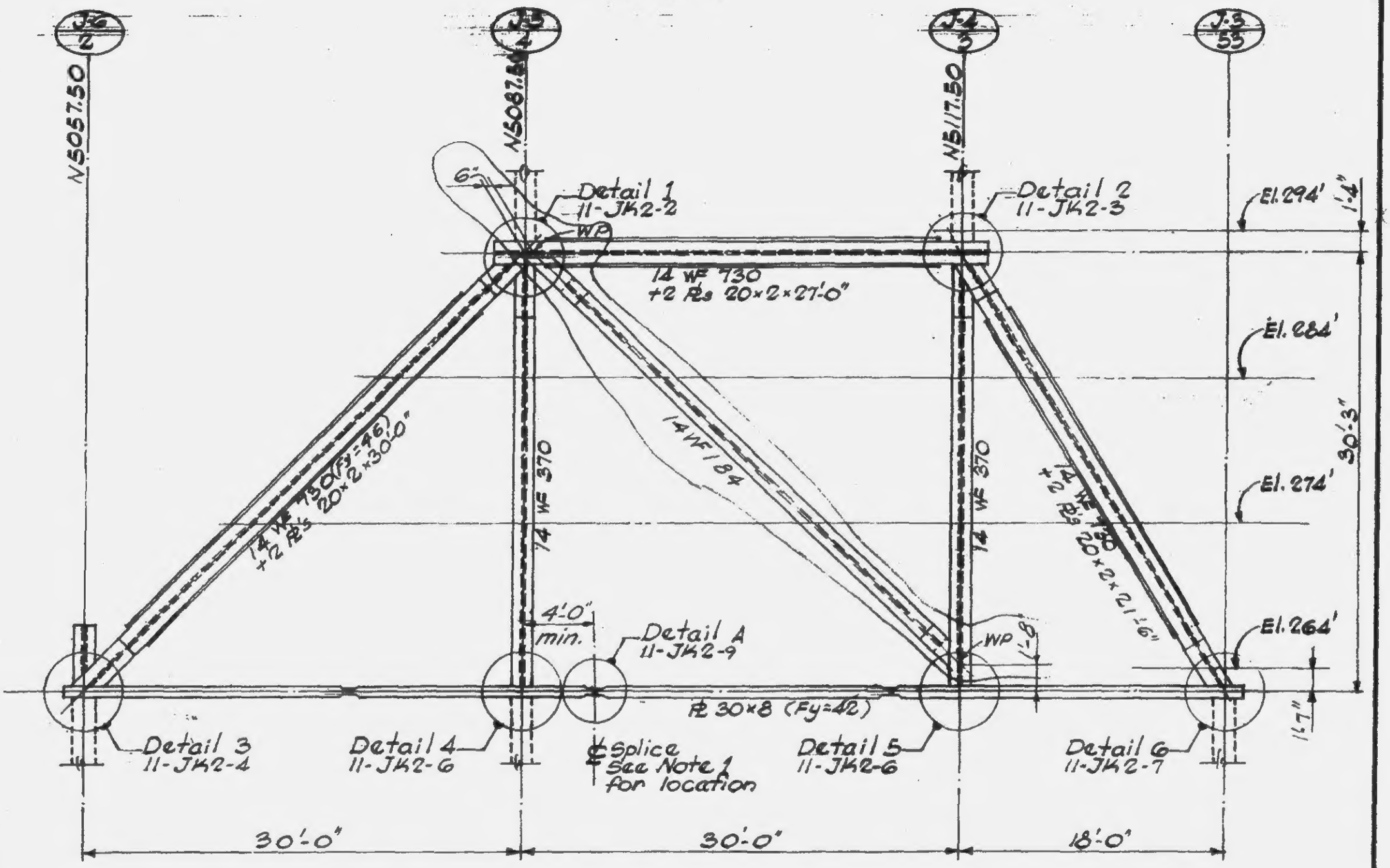

TRUSS JT-1

1/8" = 1'-0"

(at W10290.00)

Notes:

1. Number and location of splices at Contractors option.
2. For intermediate support of bottom chord see Det. B, 11-JK2-9.
3. All steel shall have a minimum yield stress of 36 ksi, except as noted.

LICENSED PROFESSIONAL ENGINEER
LESLIE E. ROBERTSON
No. 34360
UNIVERSITY OF THE STATE OF NEW YORK

DRAWN
A.F.
REVIEWED
E.L.

11-J1-2

SKILLING, HELLE, CHRISTIANSEN, ROBERTSON

PROJECT: THE WORLD TRADE CENTER — TRUSS ELEVATION — DATE: 3-15-67

REVISIONS

4-5-68

4-26-68

4-18-69

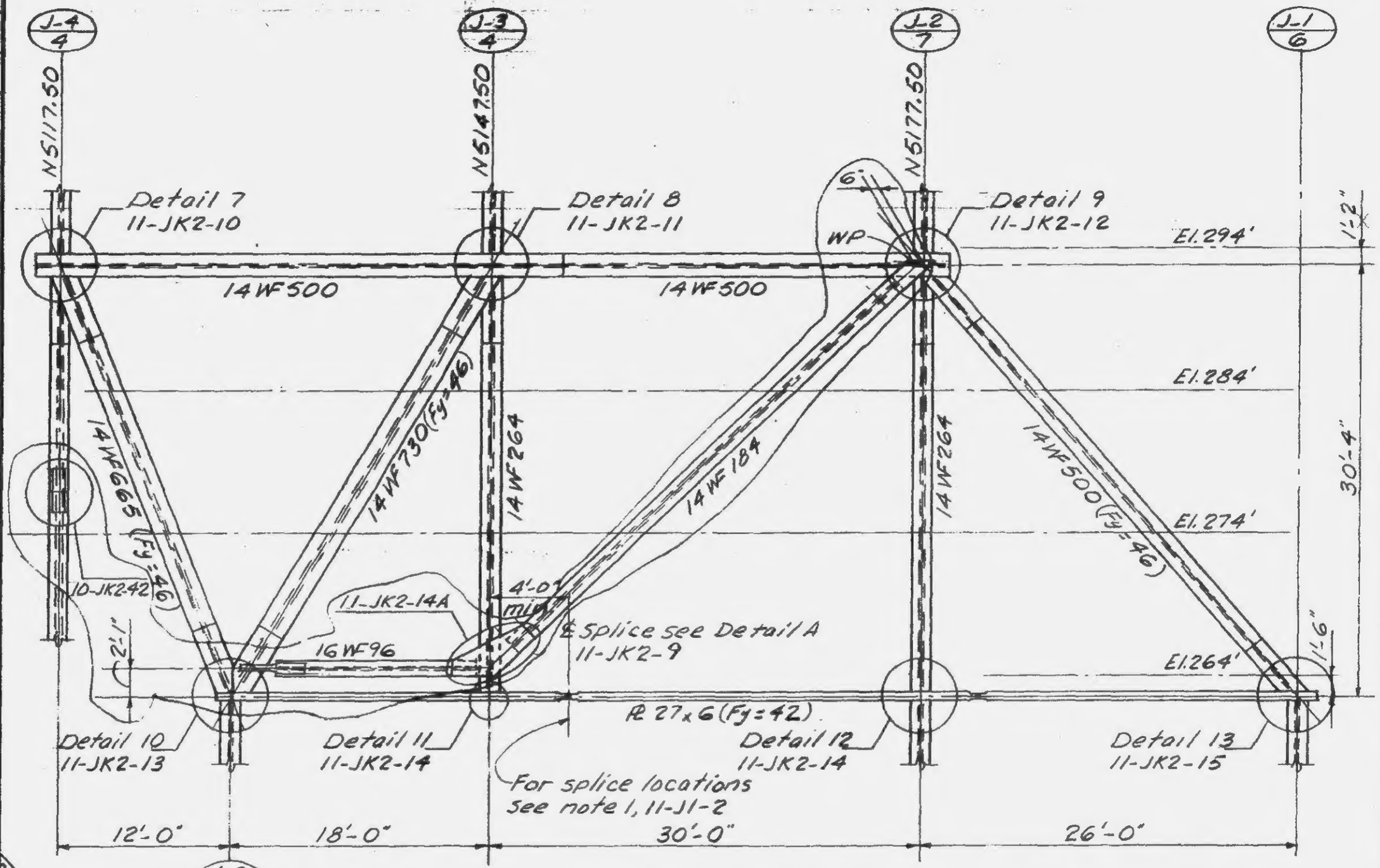

TRUSS JT-2

1/8"=1'-0"

(at W10260.00)

Notes:

1. For intermediate support of bottom chord see Detail B, 11-JK2-9.
2. All steel shall have a minimum yield stress of 36 ksi, except as noted.

LICENSED PROFESSIONAL ENGINEER
LESLIE E. ROBERTSON
No. 34360
UNIVERSITY OF THE STATE OF NEW YORK

DRAWN A.F.

REVIEWED E.L.

11-J1-3

SKILLING · HELLE · CHRISTIANSEN · ROBERTSON — Structural Civil Engineers

PROJECT THE WORLD TRADE CENTER

TITLE TRUSS ELEVATION

DATE 5-15-67

REVISIONS

4-5-68

4-26-68

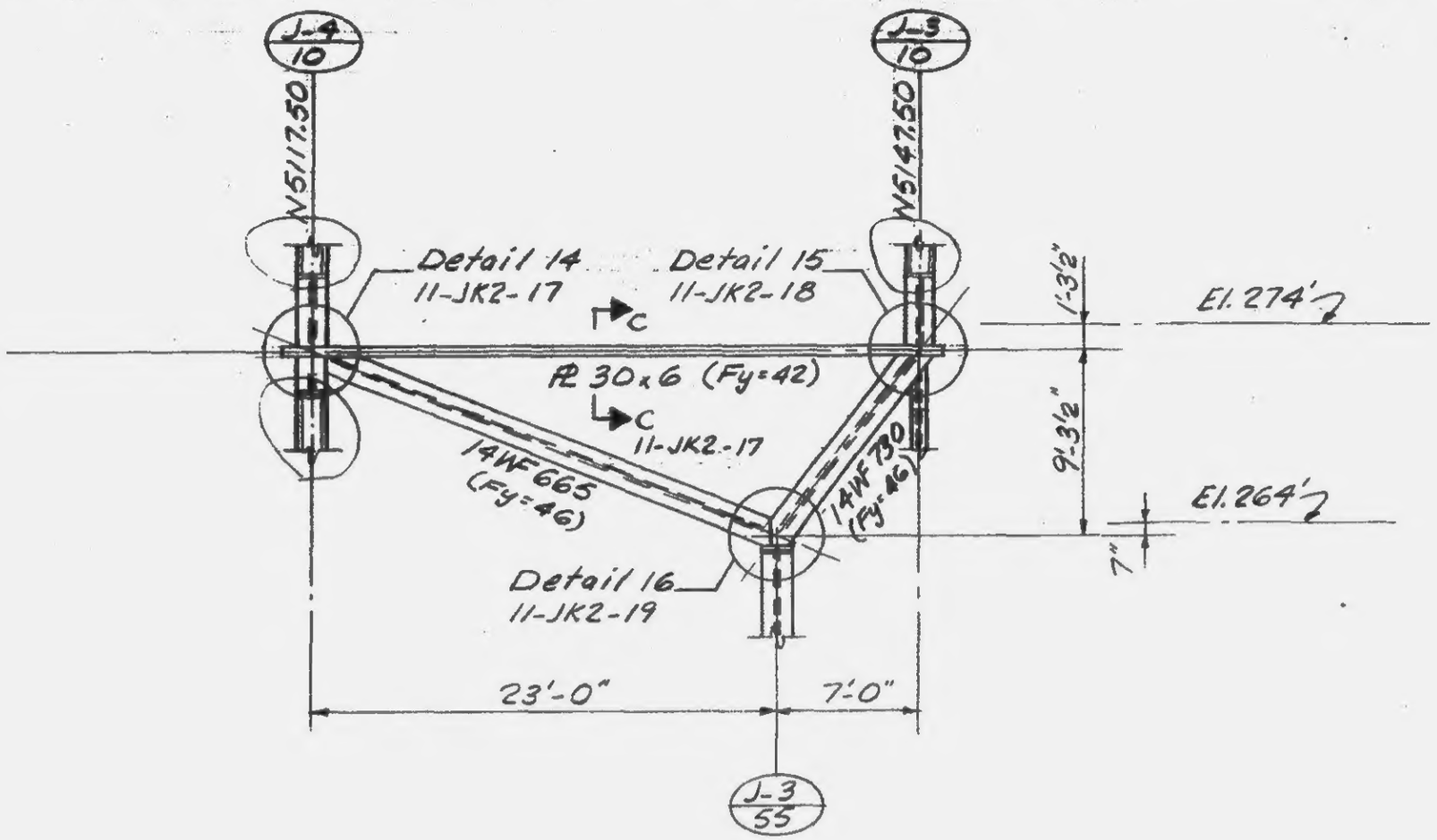

TRUSS JT-3

3/8" = 1'-0"

(at W10080.00)

Note:

All steel shall have a minimum yield stress of 36 ksi, except as noted.

LICENSED PROFESSIONAL ENGINEER
LESLIE E. ROBERTSON
No. 84360
UNIVERSITY OF THE STATE OF NEW YORK

11-J1-4

SKILLING - HELLE - CHRISTIANSEN - ROBERTSON — Structural & Civil Engineers

PROJECT: THE WORLD TRADE CENTER | TITLE: TRUSS ELEVATION | DATE: 5-15-67

REVISIONS

5-1-68

4-18-69

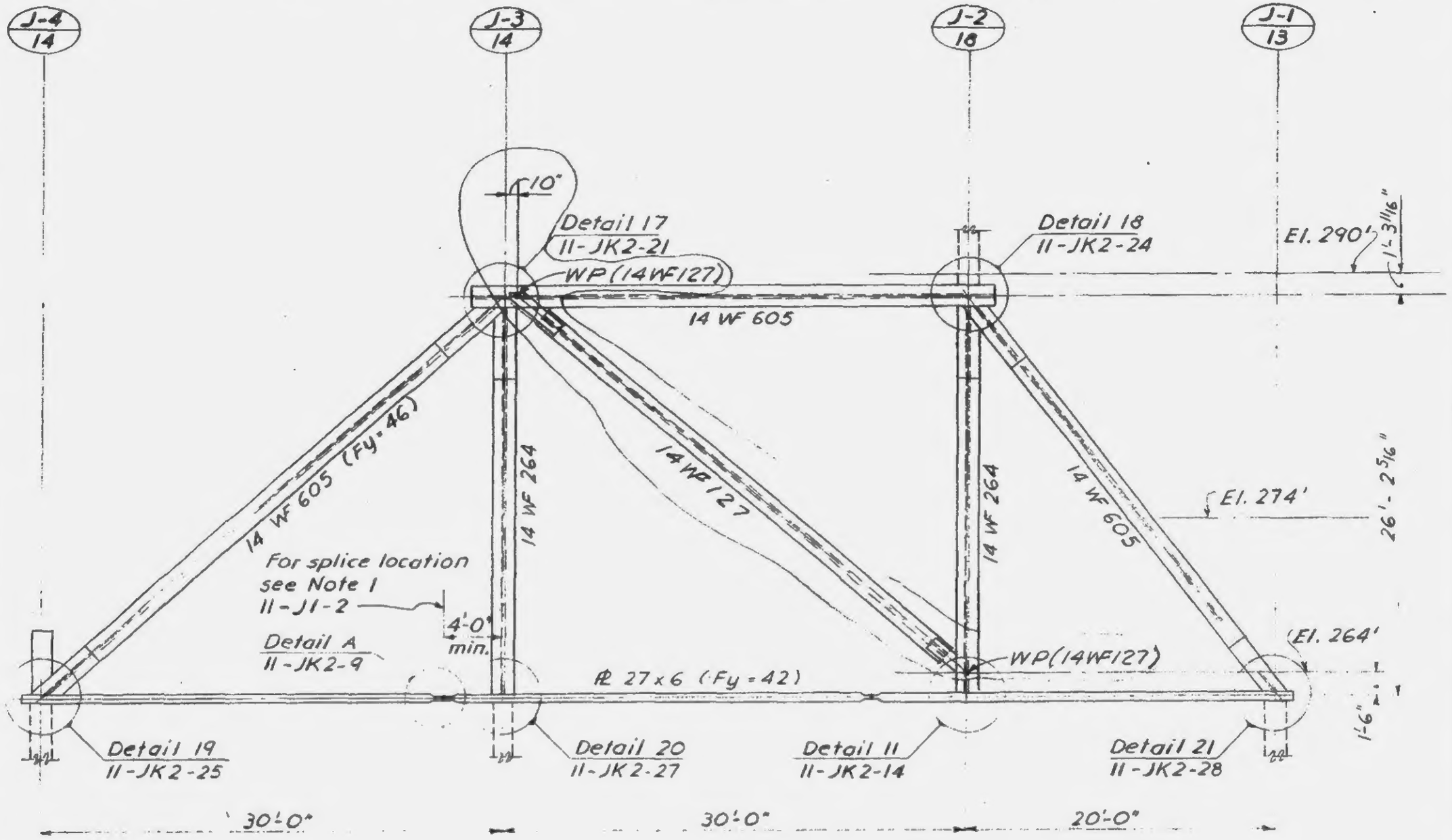

TRUSS JT-4

3/8" - 1'-0"

(at W 9974.50)

Notes:

1. For intermediate support of bottom chord see Detail B, 11-JK2-9.
2. All steel shall have a minimum yield stress of 36 ksi, except as noted.

LICENSED PROFESSIONAL ENGINEER — LESLIE E. ROBERTSON — No. 34360 — UNIVERSITY OF THE STATE OF NEW YORK

DRAWN A.F.

REVIEWED E.L.

11-J1-5

SKILLING - HELLE - CHRISTIANSEN - ROBERTSON Structural & Civil Engineers

PROJECT THE WORLD TRADE CENTER | TITLE TRUSS ELEVATION | DATE 3-15-67

REVISIONS

5-1-68

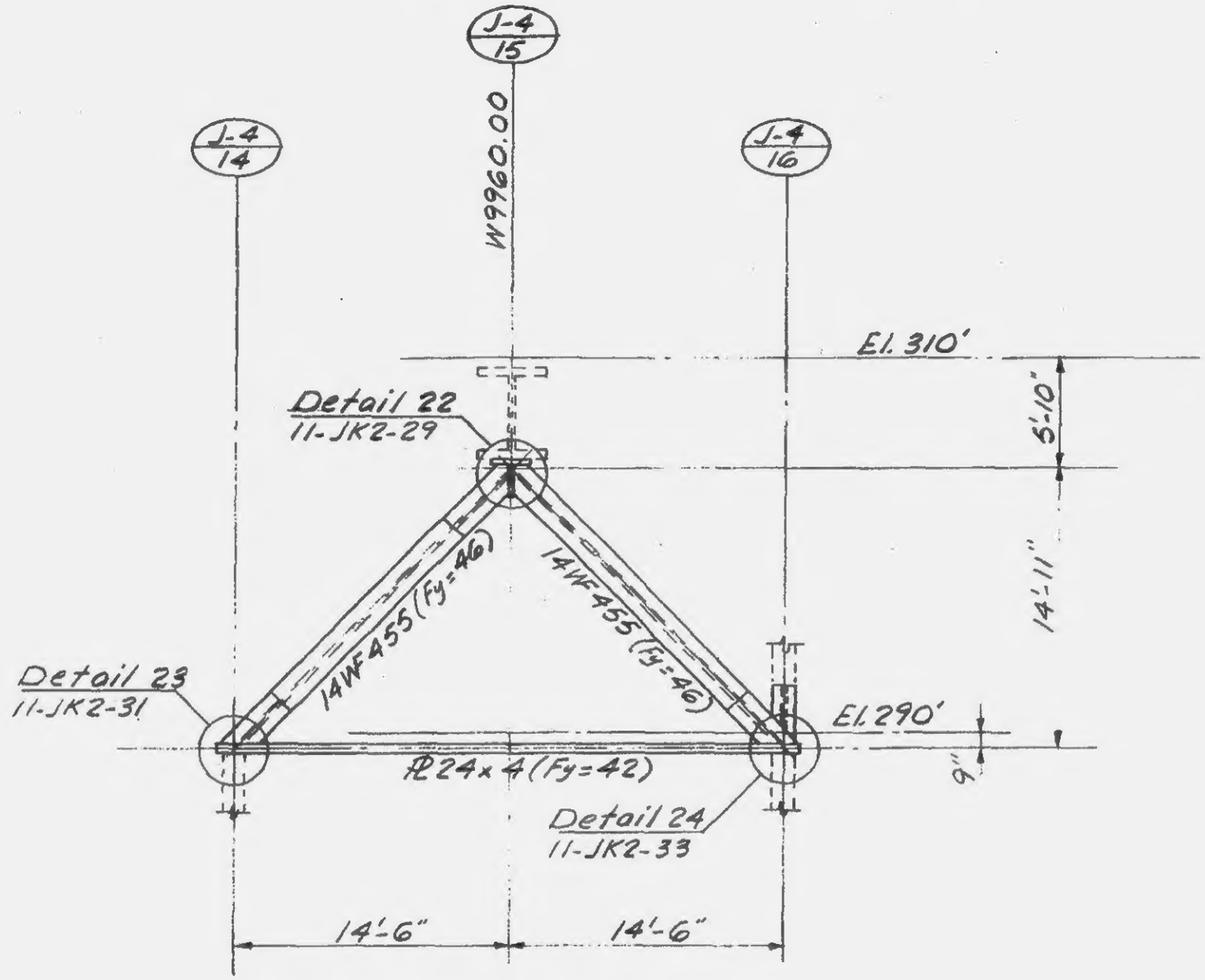

TRUSS JT-5

3/8" = 1'-0"

(at N5117.50)

Note:

1. All steel shall have a minimum yield stress of 36Ksi, except as noted.
2. For tie-bar (bottom chord) material see note on Detail A, 11-JK2-9

LICENSED PROFESSIONAL ENGINEER LESLIE E. ROBERTSON No. 34360 UNIVERSITY OF THE STATE OF NEW YORK

11-J1-6

SKILLING - HELLE - CHRISTIANSEN - ROBERTSON Structural & Civil Engineers

PROJECT THE WORLD TRADE CENTER | TITLE TRUSS ELEVATION | DATE 5-15-67

REVISIONS

5-1-68

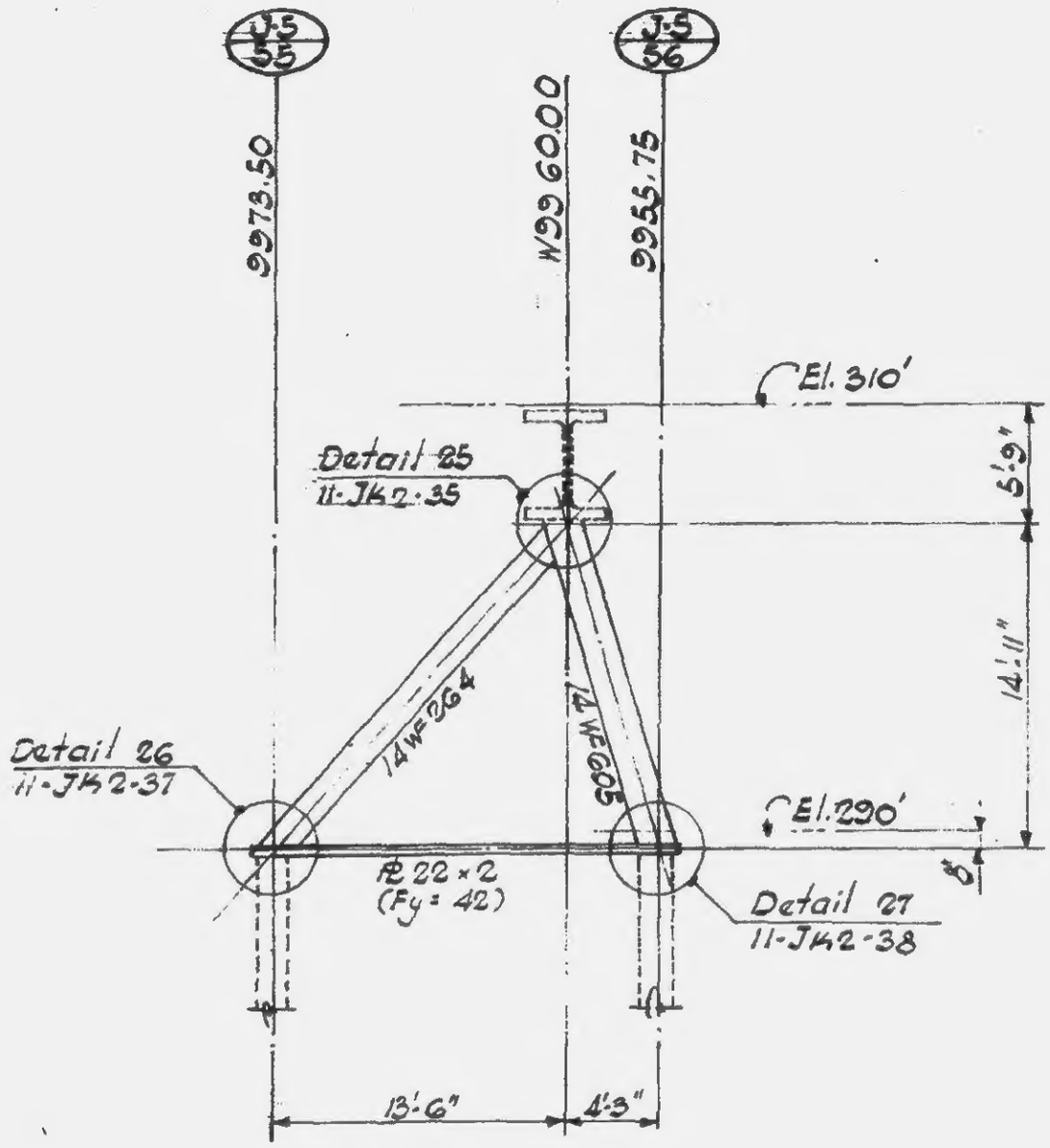

TRUSS JT-6

1/8" = 1'-0"

(at N5072.50)

Note:

1. All steel shall have a minimum yield stress of 36 K.S.I., except as noted.
2. For tie-bar (bottom chord) material, see note on Detail A, 11-JK2-9.

LICENSED PROFESSIONAL ENGINEER
LESLIE E. ROBERTSON
No. 34360
UNIVERSITY OF THE STATE OF NEW YORK

11-J1-7

SKILLING - HELLE - CHRISTIANSEN - ROBERTSON — Structural & Civil Engineers

PROJECT THE WORLD TRADE CENTER | TITLE TRUSS ELEVATION | DATE 5-15-67

REVISIONS

5-1-68

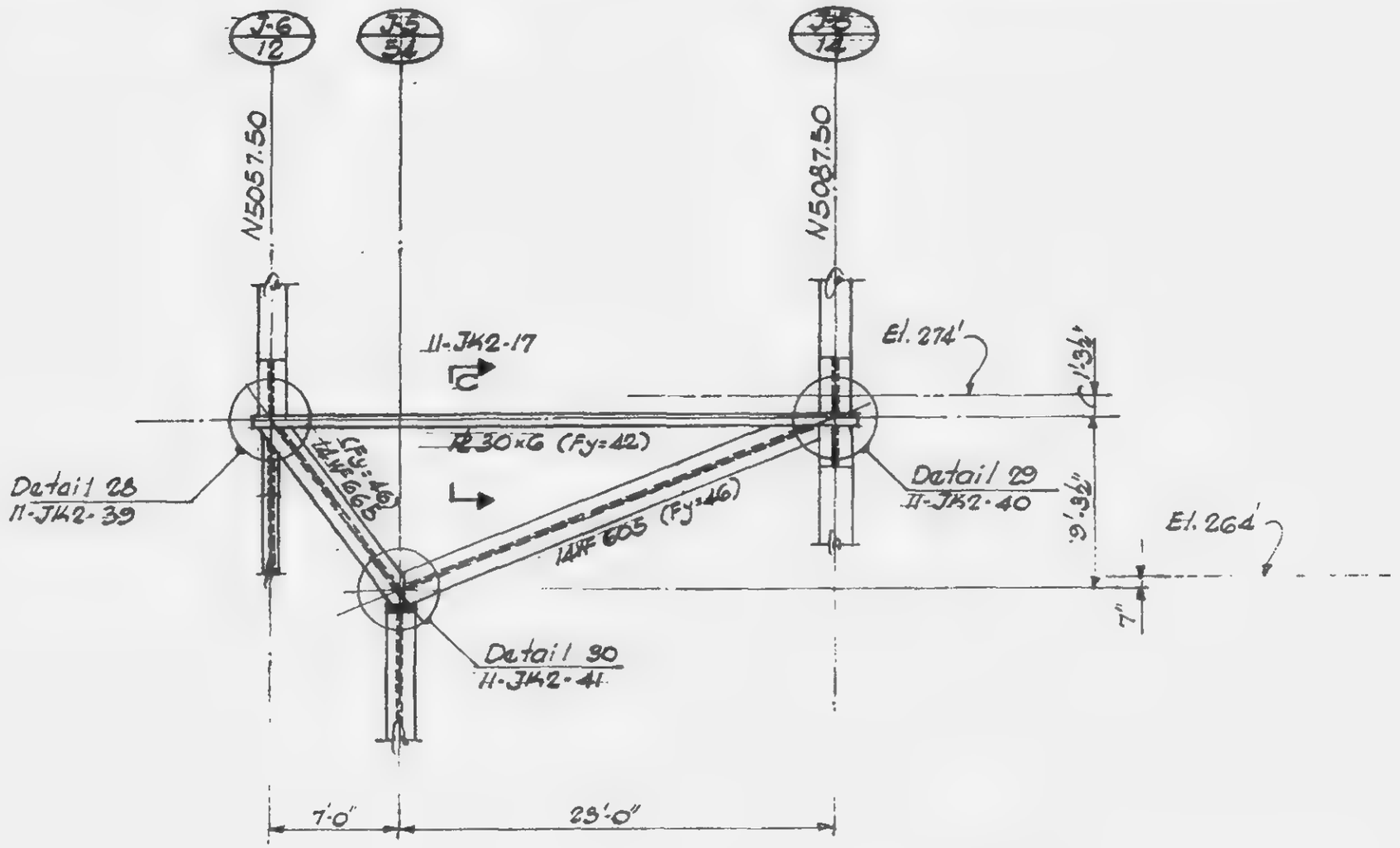

TRUSS JT-7

1/8" = 1'-0"

(at W9990.00)

Notes:

1. All steel shall have a minimum yield stress of 36 KSi, except as noted.
2. For tie-bar (top chord) material see note on Detail A, 11-JK2-9

LESLIE E. ROBERTSON — No. 34560

11-J1-8

SKILLING - HELLE - CHRISTIANSEN - ROBERTSON Structural & Civil Engineers

PROJECT THE WORLD TRADE CENTER | TITLE TRUSS ELEVATION | DATE 5-15-67

REVISIONS

5-1-68

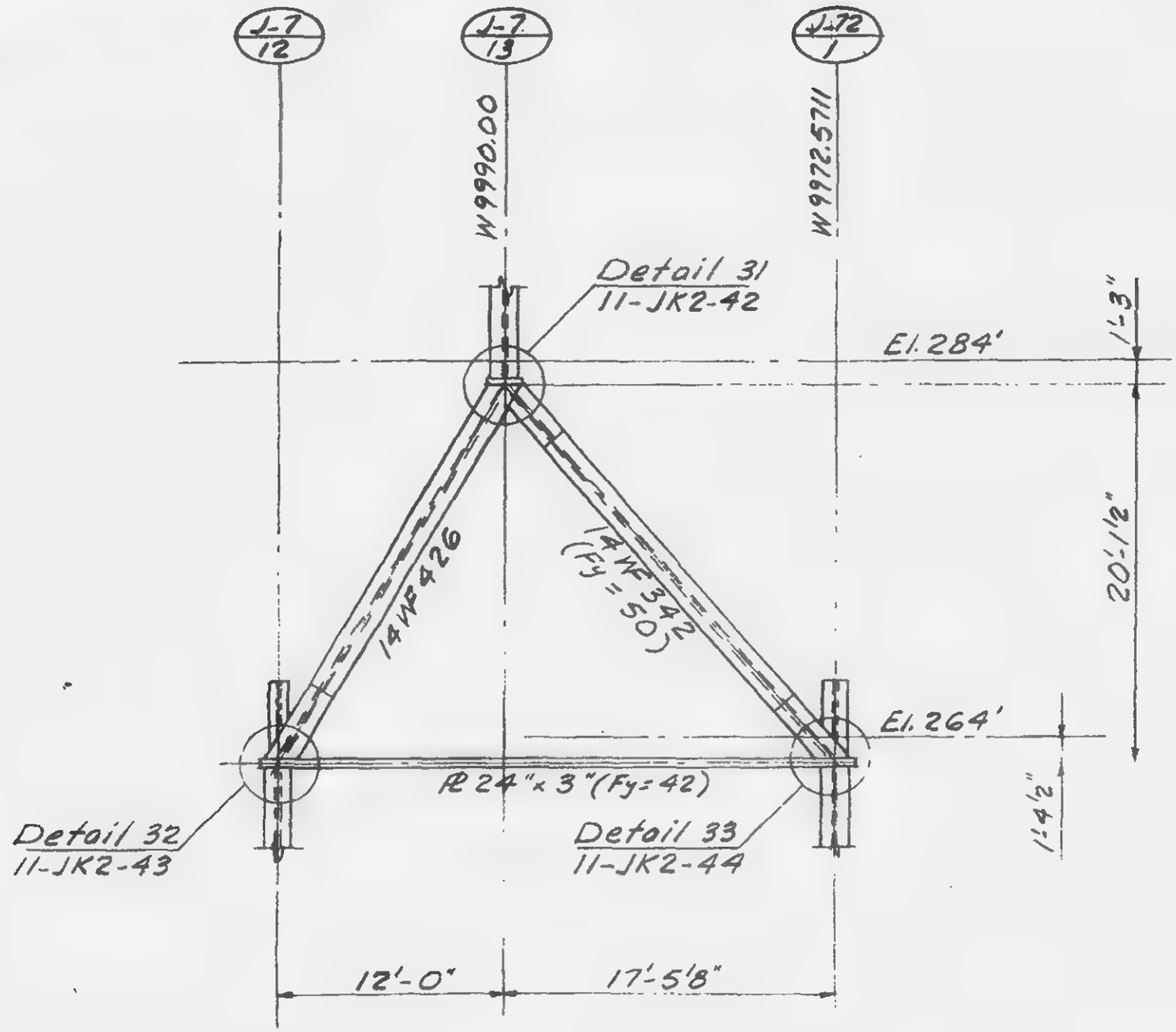

TRUSS JT-8

⅛" = 1'-0"

(at N5027.50)

Notes:

1. For intermediate support of bottom chord see Detail B, 11-JK2-9.
2. All steel shall have a minimum yield stress of 36 ksi, except as noted.
3. For tie-bar (bottom chord) material see note on Detail A, 11-JK2-9.

11-J1-9

LICENSED PROFESSIONAL ENGINEER LESLIE E. ROBERTSON No. 04260 UNIVERSITY OF THE STATE OF NEW YORK

SKILLING - HELLE - CHRISTIANSEN - ROBERTSON Structural & Civil Engineers

PROJECT THE WORLD TRADE CENTER | TITLE TRUSS ELEVATION | DATE 5-15-67

REVISIONS
6-7-68

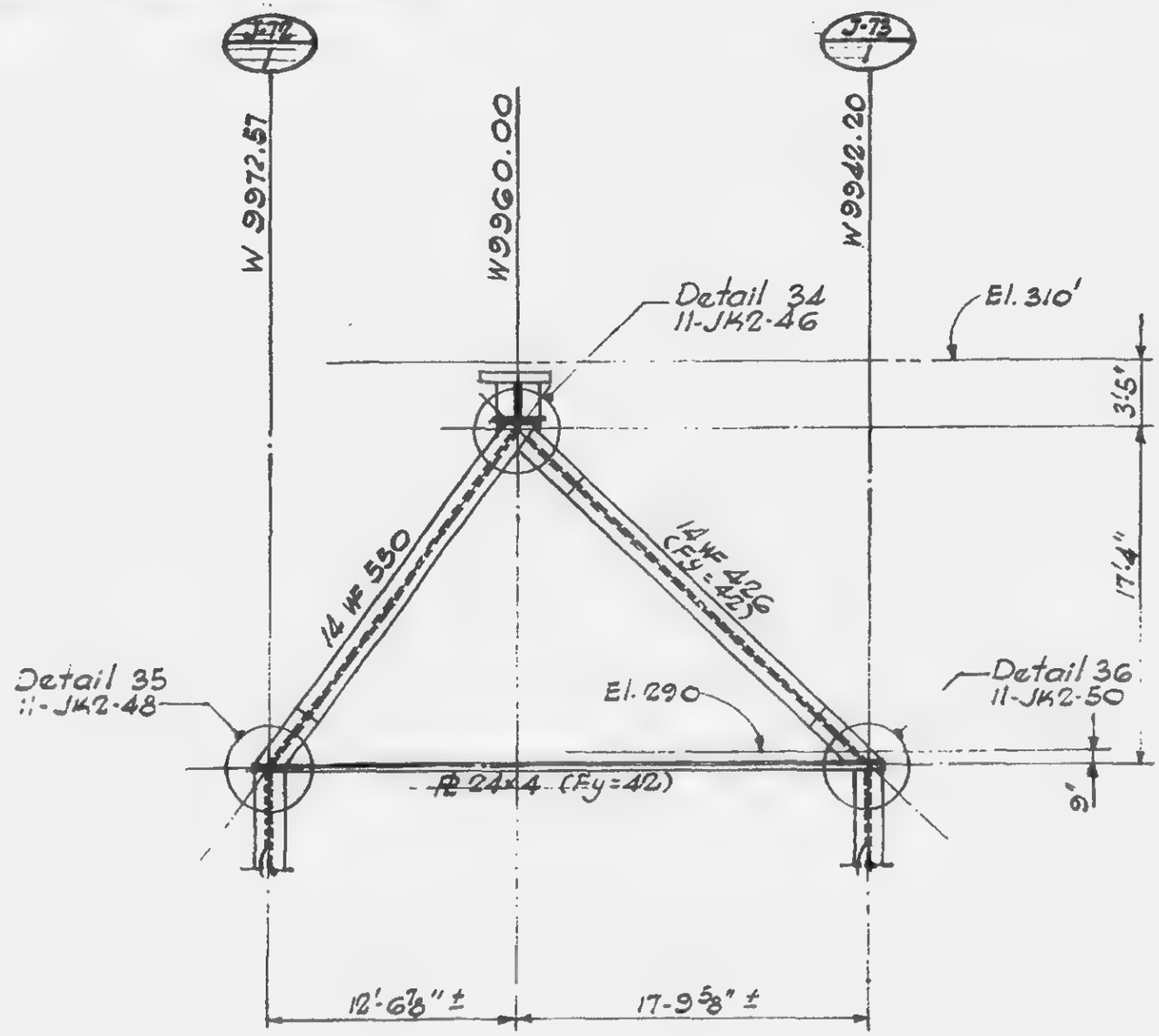

TRUSS JT-9

1/8" = 1'-0"
(at N5027.50)

Notes:
1. All steel shall have a minimum yield stress of 36 ksi, except as noted.
2. For tie-bar (bottom chord) material see note on Detail A, 11-JK2-9.

LICENSED PROFESSIONAL ENGINEER
LESLIE E. ROBERTSON
No. 34360
UNIVERSITY OF THE STATE OF NEW YORK

11-J1-10

SKILLING - HELLE - CHRISTIANSEN - ROBERTSON Structural & Civil Engineers

PROJECT THE WORLD TRADE CENTER | TITLE TRUSS ELEVATION | DATE 5-15-67

REVISIONS
6-7-68

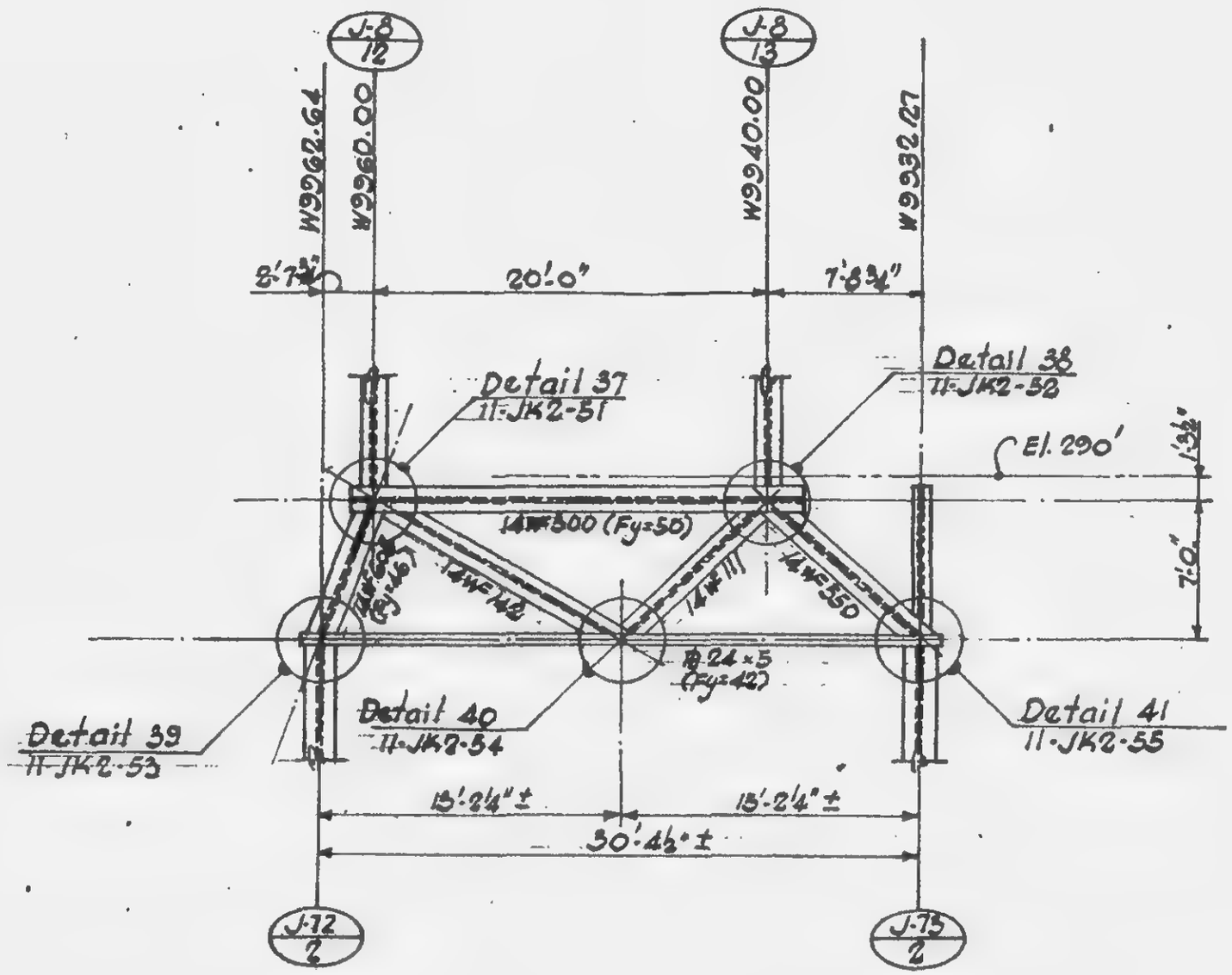

TRUSS JT-10

1/8" = 1'-0"
(at N4997.50)

Notes:

1. All steel shall have a minimum yield stress of 36ksi, except as noted.
2. For tie bar (bottom chord) material see note on Detail A, 11-JK2-9.

LICENSED PROFESSIONAL ENGINEER
LESLIE E. ROBERTSON
No. 34360
STATE OF NEW YORK

11-J1-11

SKILLING, HELLE, CHRISTIANSEN, ROBERTSON — Structural & Civil Engineers

PROJECT THE WORLD TRADE CENTER | TITLE TRUSS ELEVATION (KT-3) | DATE 5-15-67

REVISIONS
9-4-68
10-15-68
3-21-69

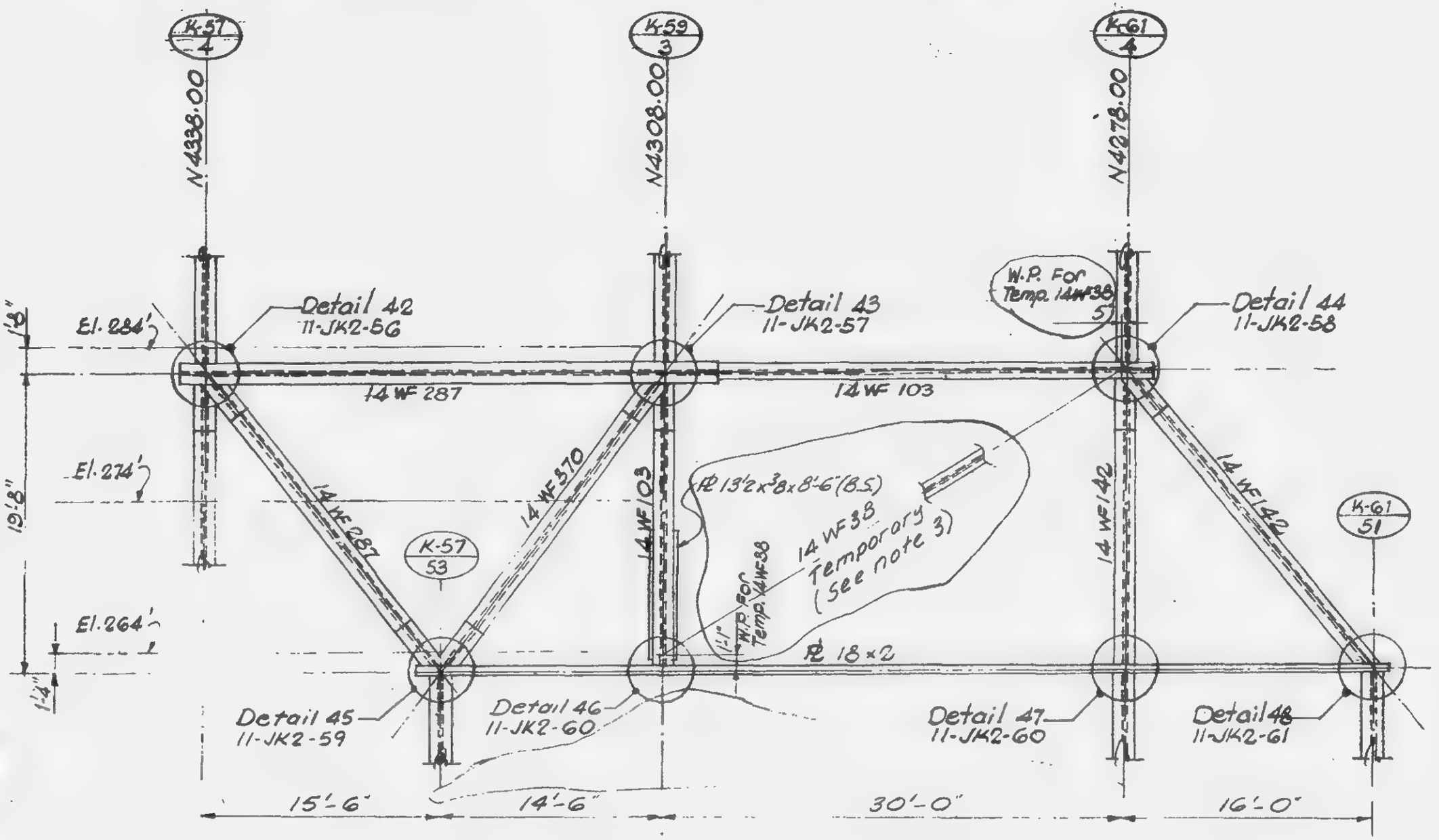

TRUSS KT-3
1/8" = 1'-0"
(at W10034.14)

Notes:
1. For intermediate support of bottom chord, see Detail B, 11-JK2-9.
2. All steel shall have a minimum yield stress of 36 ksi, except as noted.
3. Temporary 14WF38 to remain in place until column K57-4 is erected with framing and floor slab at this column complete to El. 332, when it shall be removed.

LICENSED PROFESSIONAL ENGINEER — LESLIE E. ROBERTSON — No. 34960 — UNIVERSITY OF THE STATE OF NEW YORK

DESIGNED
DRAWN S.C.
REVIEWED E.L.

11-K1-26

SKILLING - HELLE - CHRISTIANSEN - ROBERTSON — Structural Steel Consulting Engineers

PROJECT THE WORLD TRADE CENTER — TITLE TRUSS CONNECTIONS

REVISIONS
4-5-68
4-26-68
4-18-69

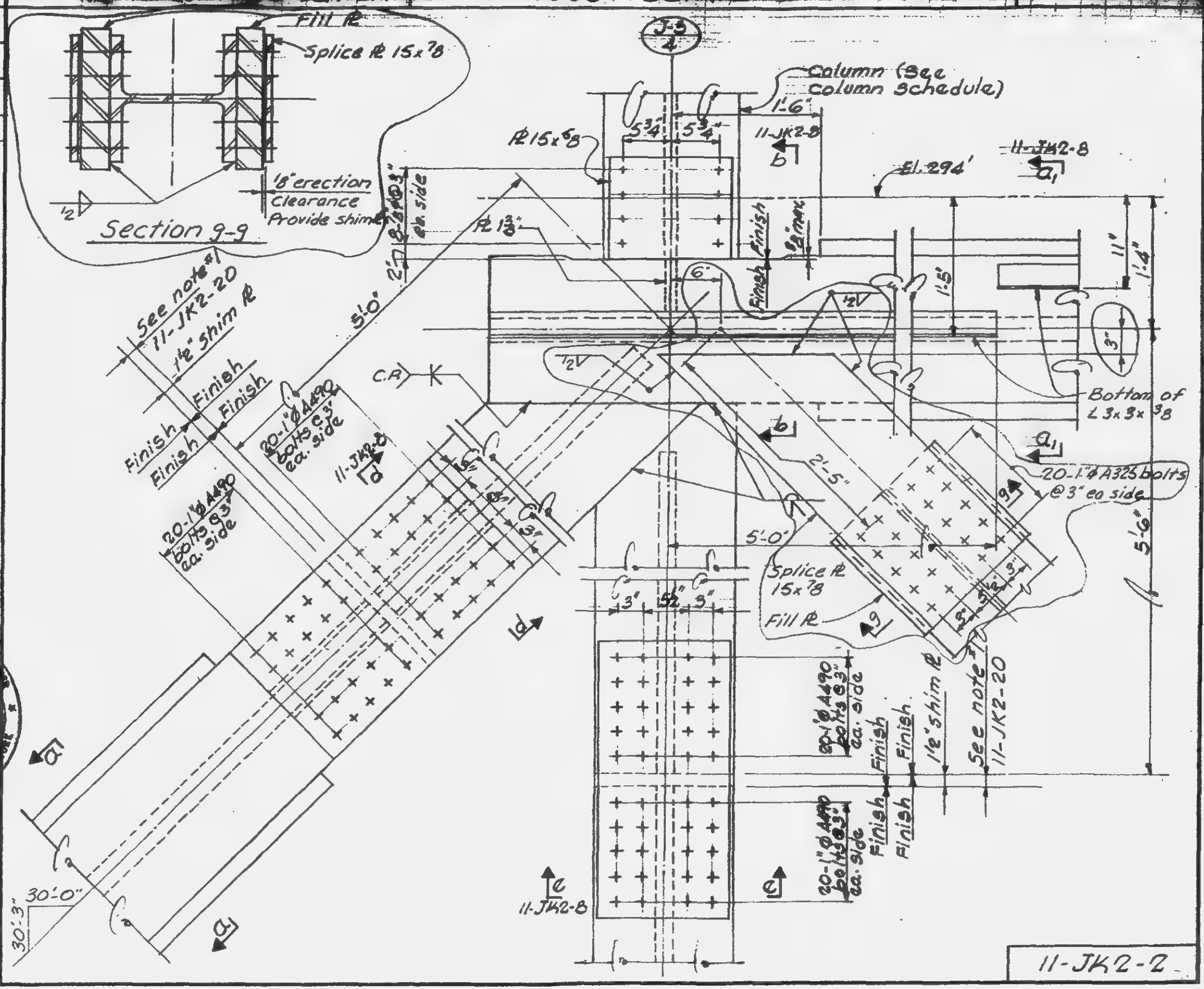

LESLIE E. ROBERTSON — No. 34360 — REGISTERED PROFESSIONAL ENGINEER — STATE OF NEW YORK

DRAWN A.F.
REVIEWED EL.

11-JK2-2

SKILLING - HELLE - CHRISTIANSEN - ROBERTSON Structural & Civil Engineers

PROJECT THE WORLD TRADE CENTER | TITLE TRUSS DETAIL 2 | DATE 5-15-67

REVISIONS

4-5-68

4-26-68

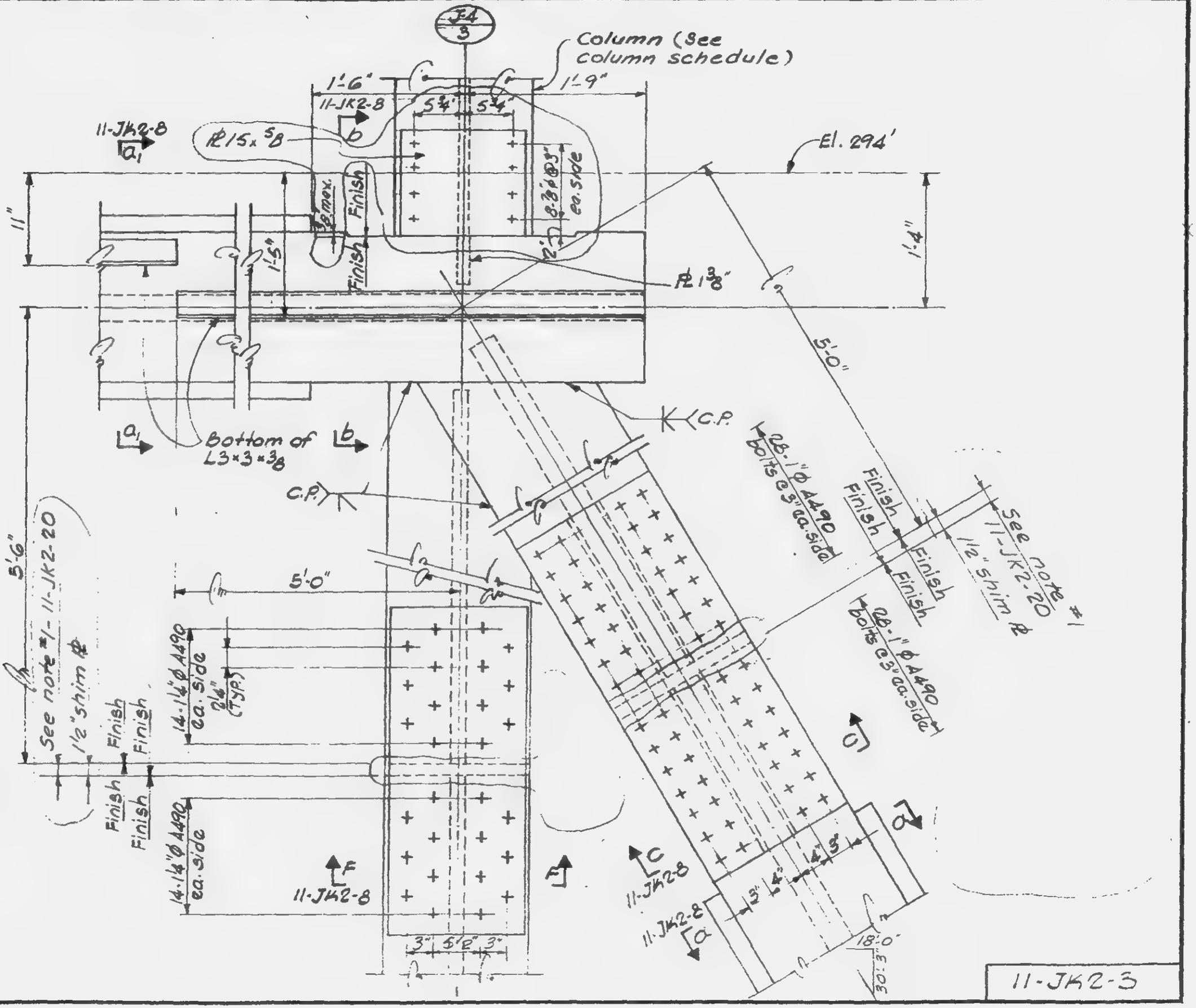

LICENSED PROFESSIONAL ENGINEER LESLIE E. ROBERTSON No. 34360 UNIVERSITY OF THE STATE OF NEW YORK

11-JK2-3

SKILLING - HELLE - CHRISTIANSEN - ROBERTSON Structural & Civil Engineers

PROJECT THE WORLD TRADE CENTER | TITLE TRUSS DETAIL 3 | DATE 5-15-67

REVISIONS

4-5-68

4-26-68

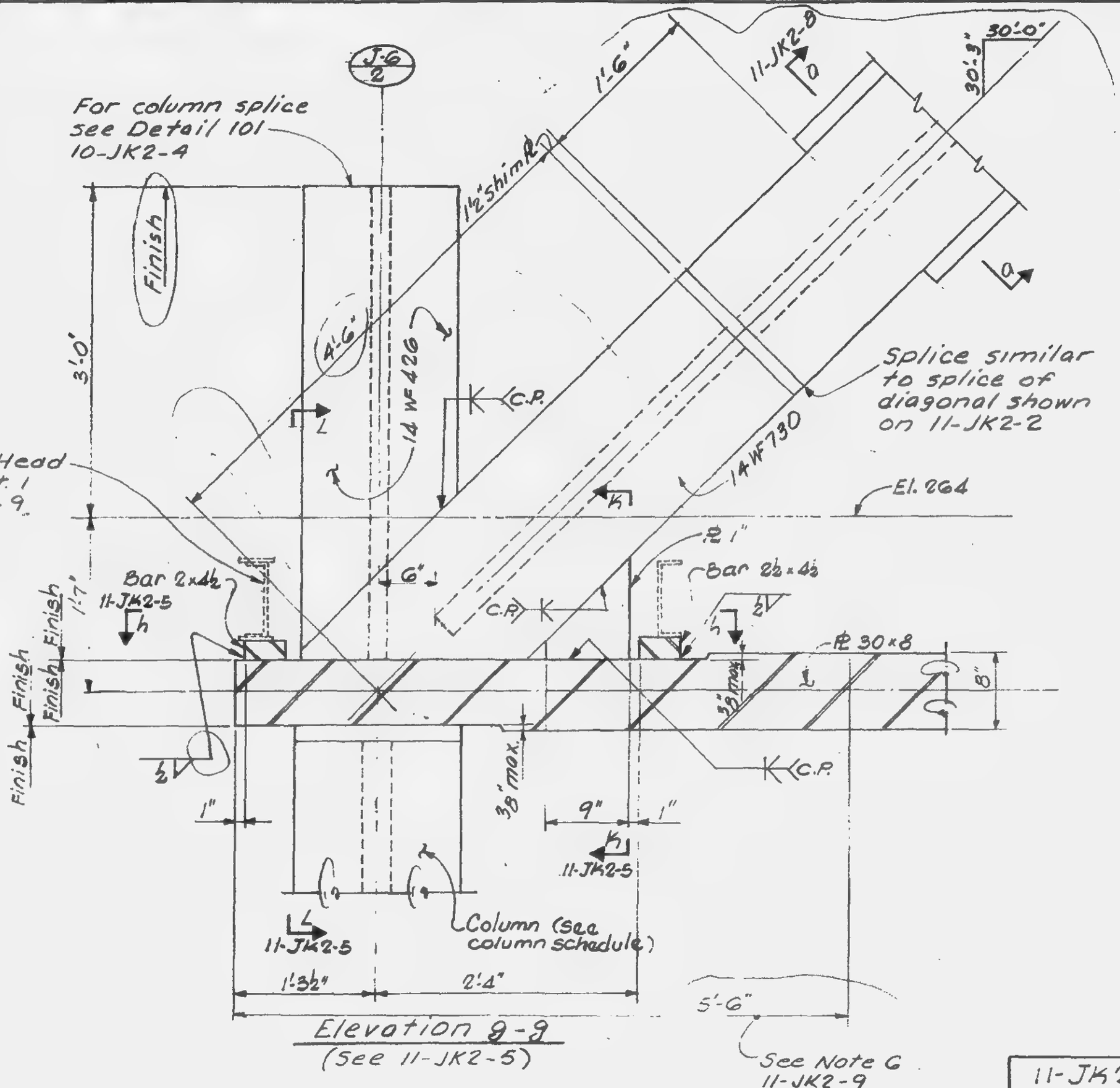

Elevation 9-9
(See 11-JK2-5)

LICENSED PROFESSIONAL ENGINEER LESLIE E. ROBERTSON No. 34360 STATE OF NEW YORK

13

11-JK2-4

SKILLING - HELLE - CHRISTIANSEN - ROBERTSON Structural & Civil Engineers

PROJECT THE WORLD TRADE CENTER | TITLE TRUSS DETAIL 3 | DATE 5-15-67

REVISIONS

4-5-68

4-26-68

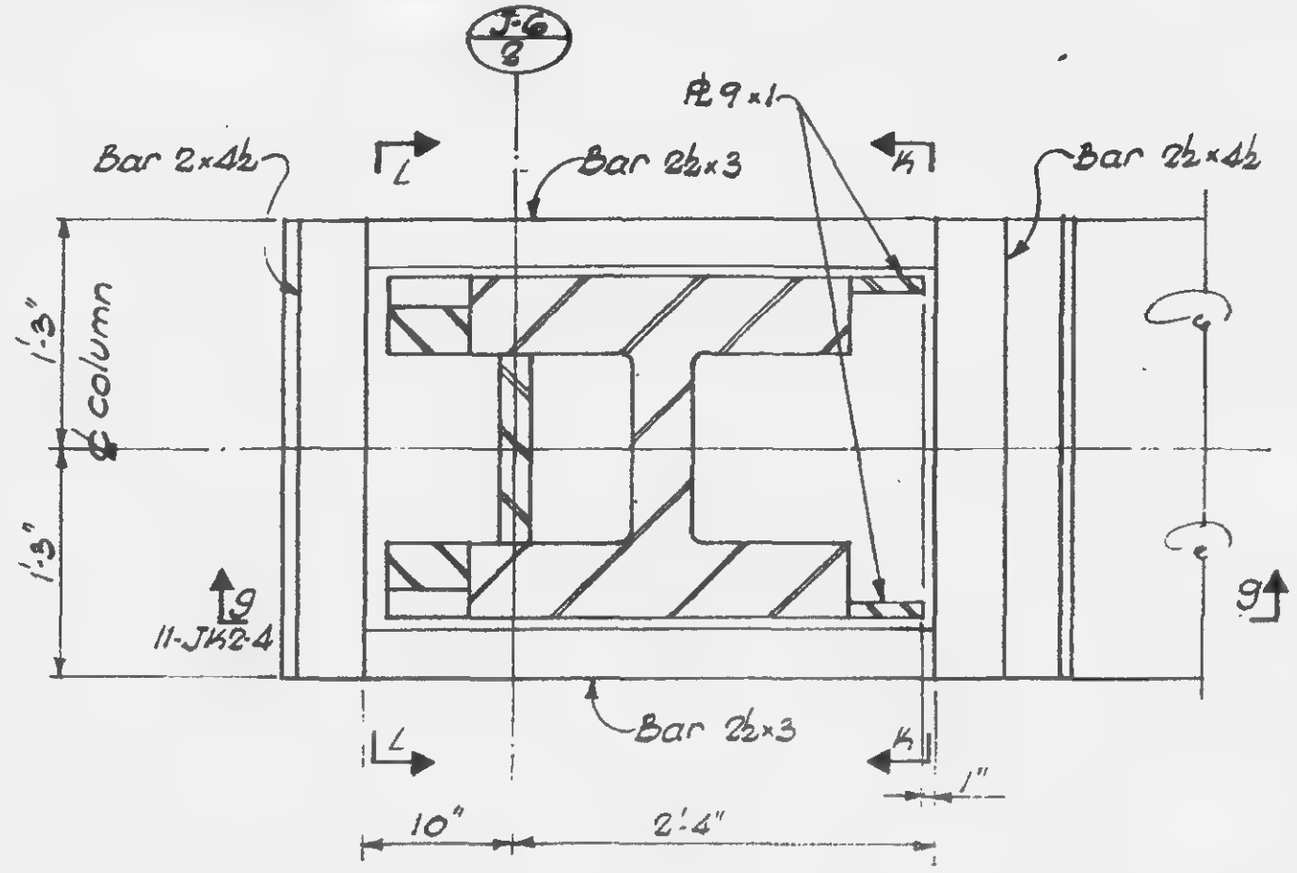

PLAN h-h

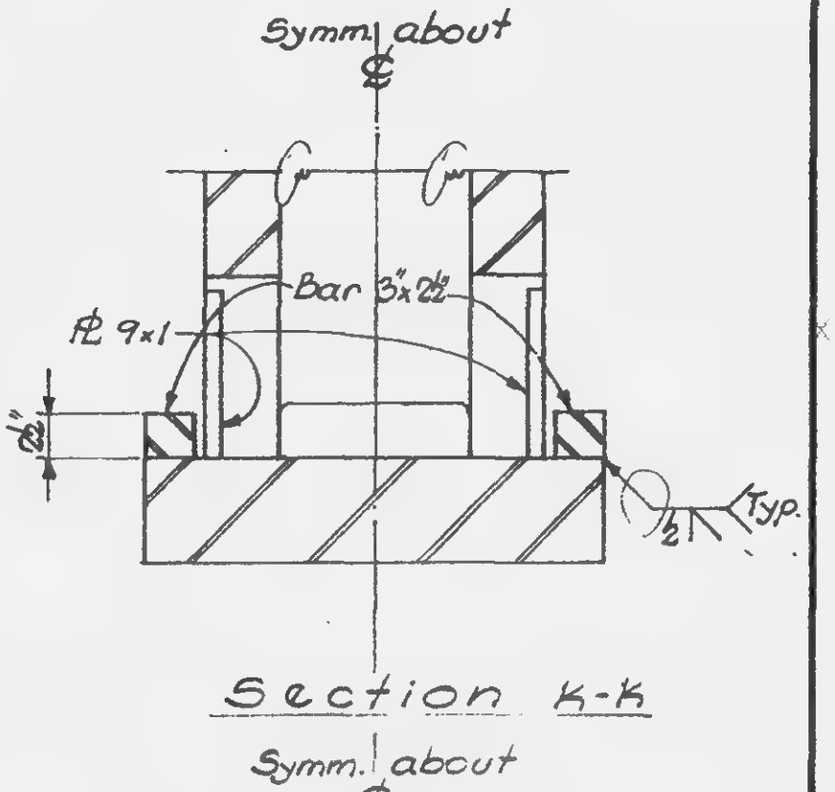

Section K-K

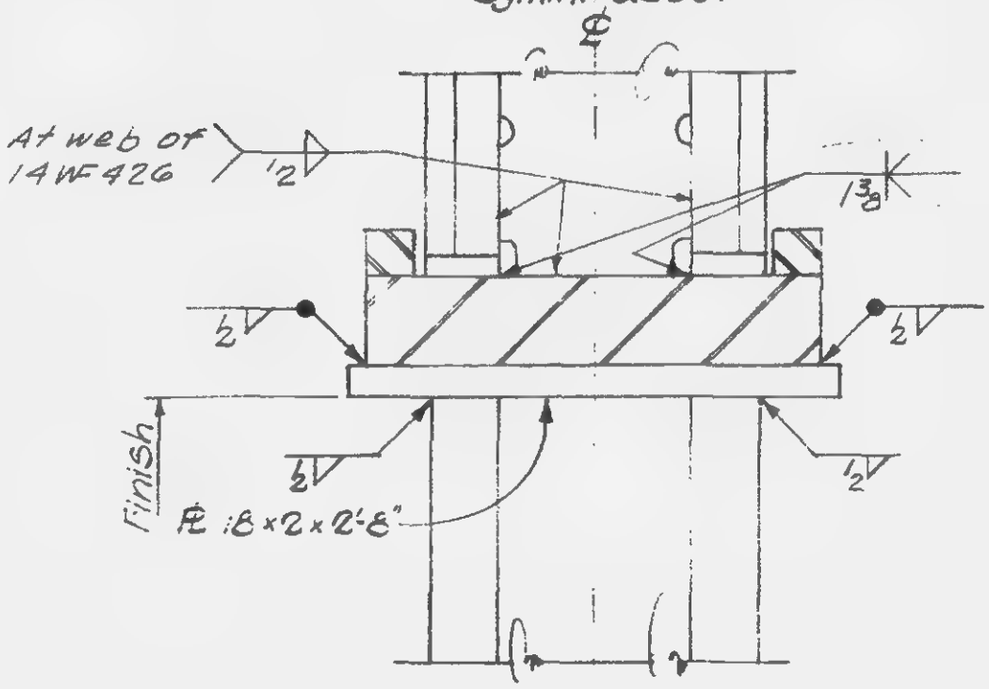

Section L-L

LICENSED PROFESSIONAL ENGINEER
LESLIE E. ROBERTSON
No. 34360
UNIVERSITY OF THE STATE OF NEW YORK

11-JK2-5

SKILLING - HELLE - CHRISTIANSEN - ROBERTSON Structural & Civil Engineers

PROJECT THE WORLD TRADE CENTER | TITLE TRUSS DETAILS | DATE 5-15-67

REVISIONS
4-5-68
4-26-68
4-18-69

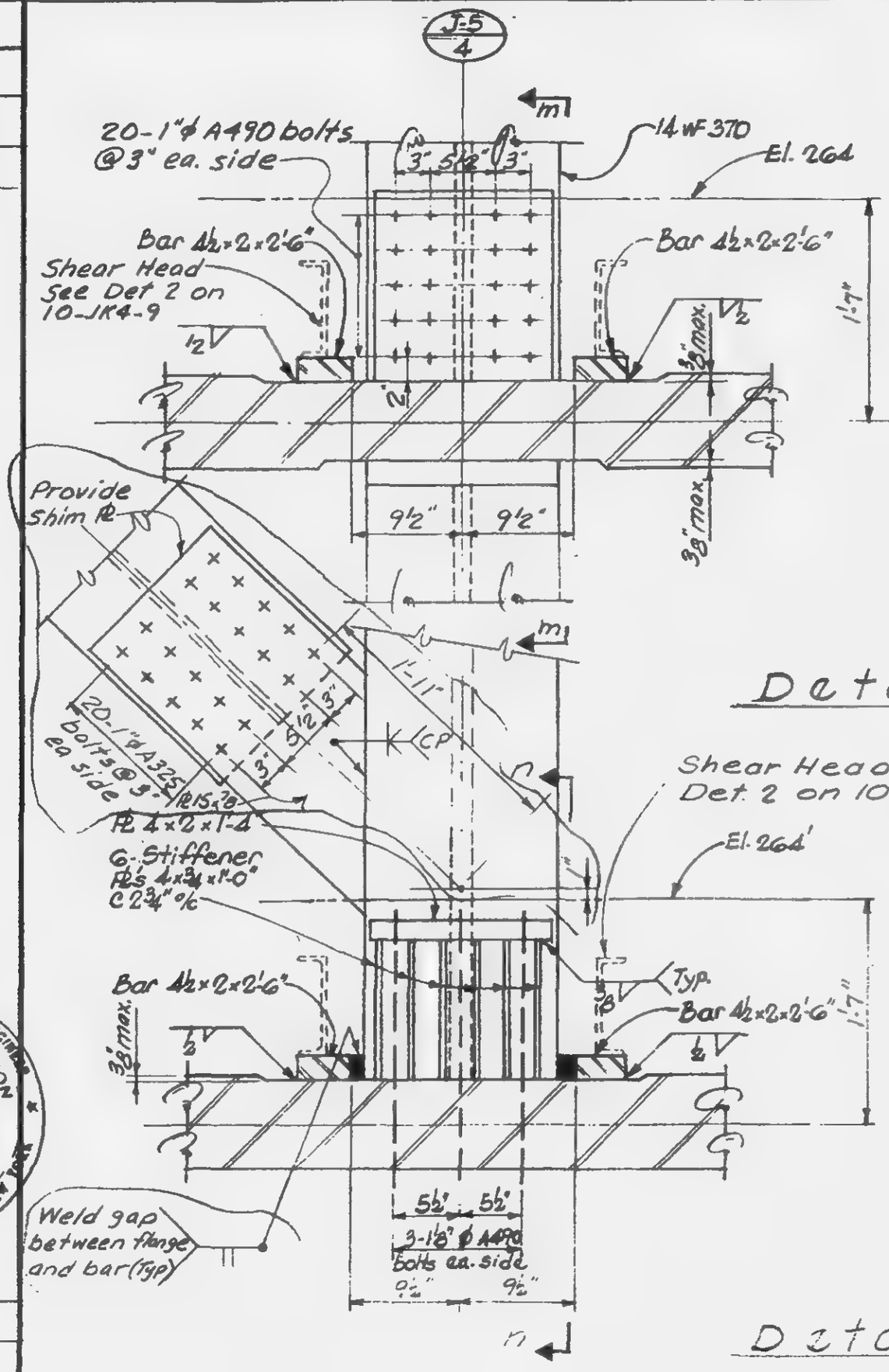

Detail 4

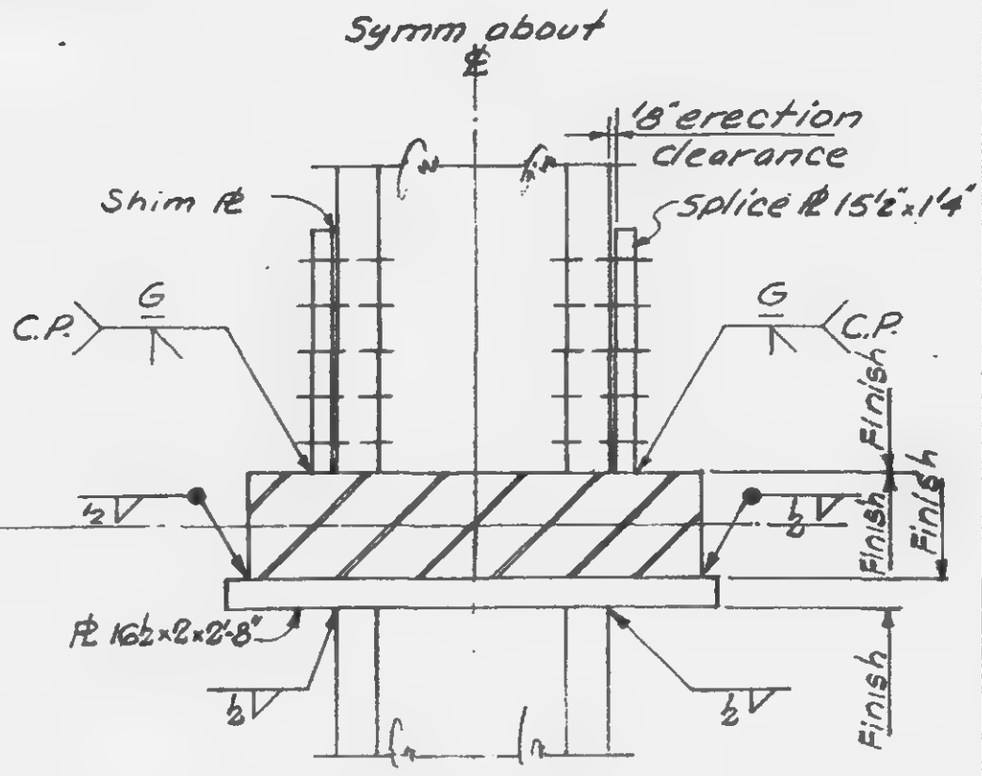

Section m-m

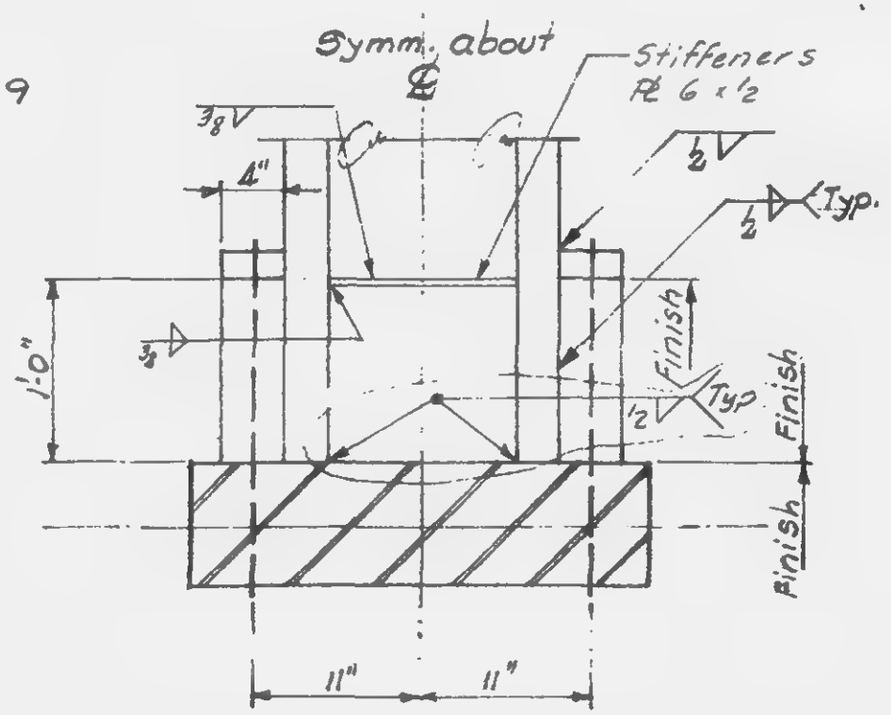

Section n-n

Detail 5

LICENSED PROFESSIONAL ENGINEER
LESLIE E. ROBERTSON
No. 34360
STATE OF NEW YORK

DRAWN A.F.
REVIEWED E.L.

11-JK2-6

SKILLING - HELLE - CHRISTIANSEN - ROBERTSON Structural & Civil Engineers

PROJECT THE WORLD TRADE CENTER | TITLE TRUSS DETAIL 6 | DATE 5-15-67

REVISIONS
4-5-68
4-26-68

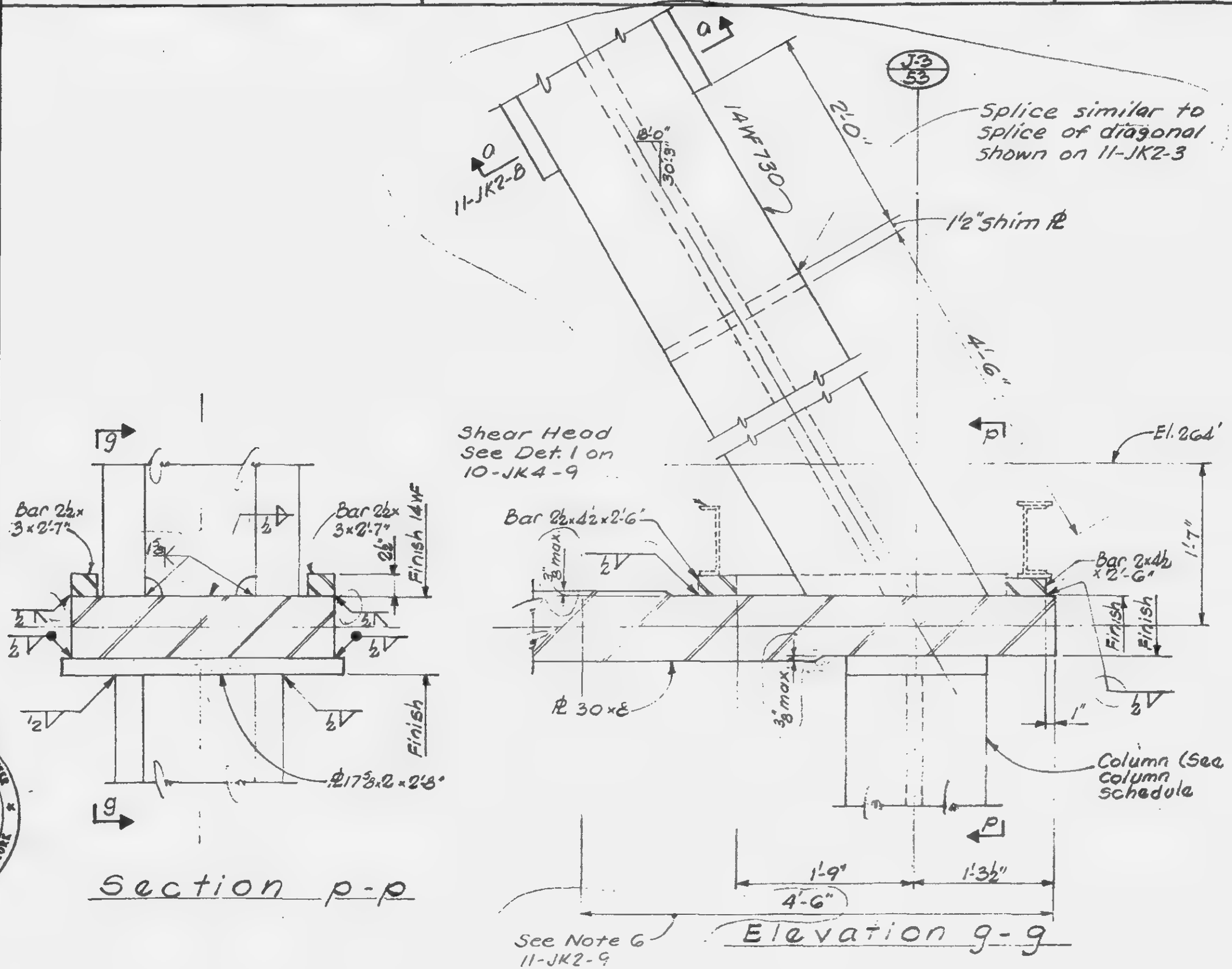

LICENSED PROFESSIONAL ENGINEER LESLIE E. ROBERTSON No. 34360 STATE OF NEW YORK UNIVERSITY OF THE STATE OF NEW YORK

11-JK2-7

SKILLING - HELLE - CHRISTIANSEN - ROBERTSON Structural & Civil Engineers

PROJECT THE WORLD TRADE CENTER | TITLE TRUSS DETAILS | DATE 5-15-67

REVISIONS
4-5-68
4-26-68
4-18-69

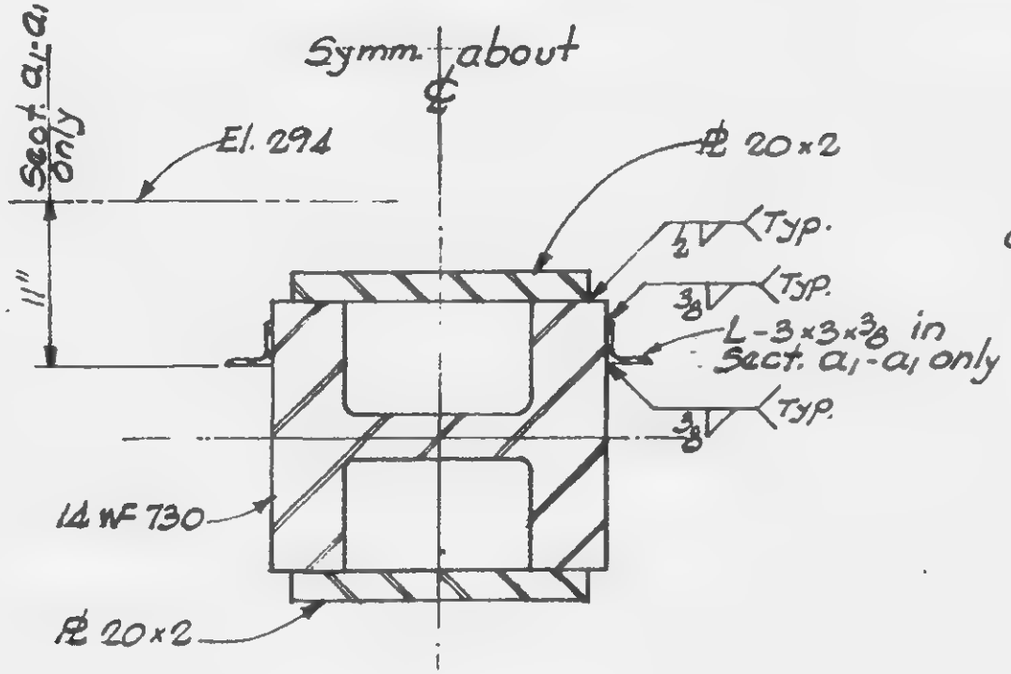

Section a-a
Section a1-a1

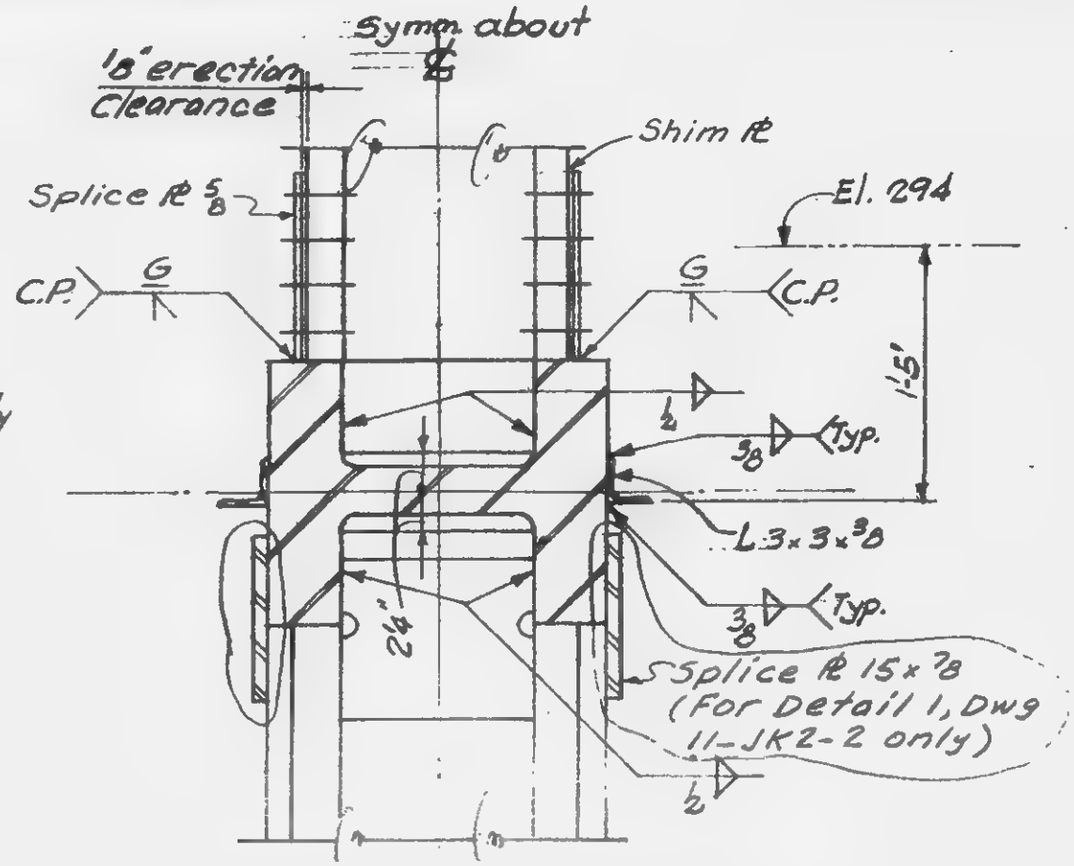

Section b-b

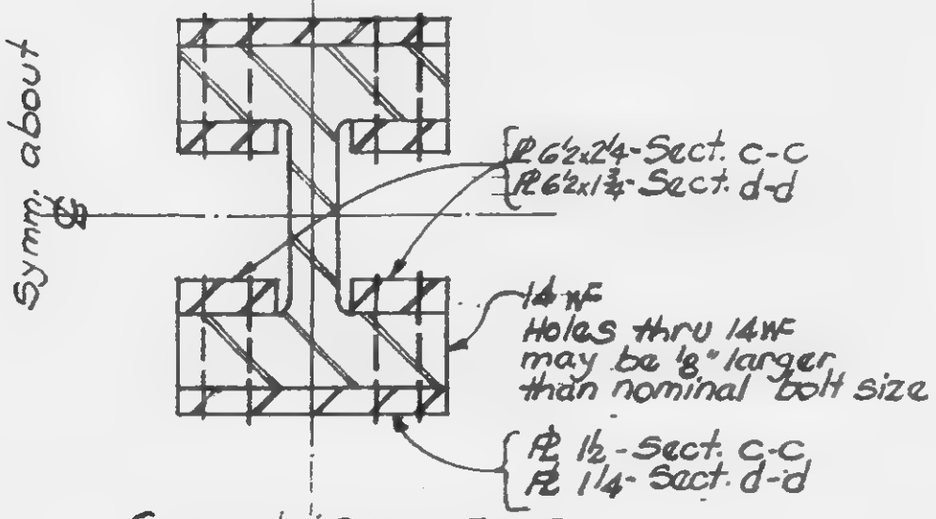

Section c-c
Section d-d

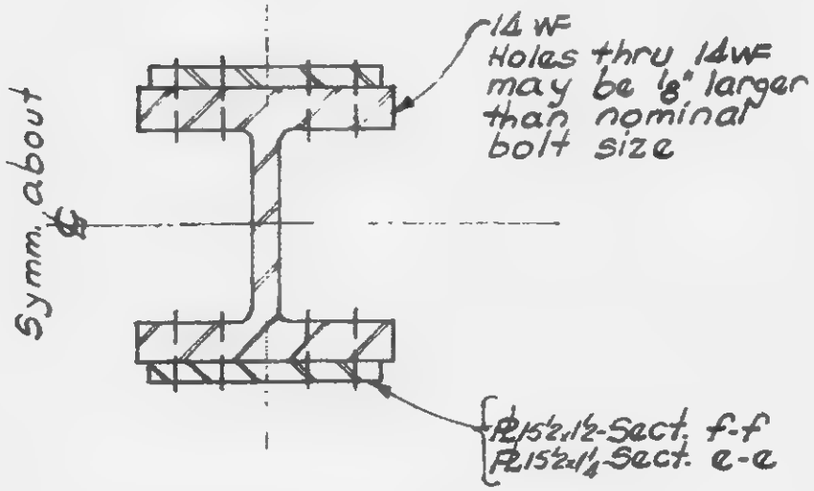

Section e-e
Section f-f

LICENSED PROFESSIONAL ENGINEER
LESLIE E. ROBERTSON
No. 34360
UNIVERSITY OF THE STATE OF NEW YORK

DRAWN A.F.
REVIEWED E.L.

11-JK2-8

SKILLING - HELLE - CHRISTIANSEN - ROBERTSON — Structural & Civil Engineers

PROJECT THE WORLD TRADE CENTER | TITLE TRUSS DETAILS | DATE 5-15-67

REVISIONS
4-5-68
4-26-68

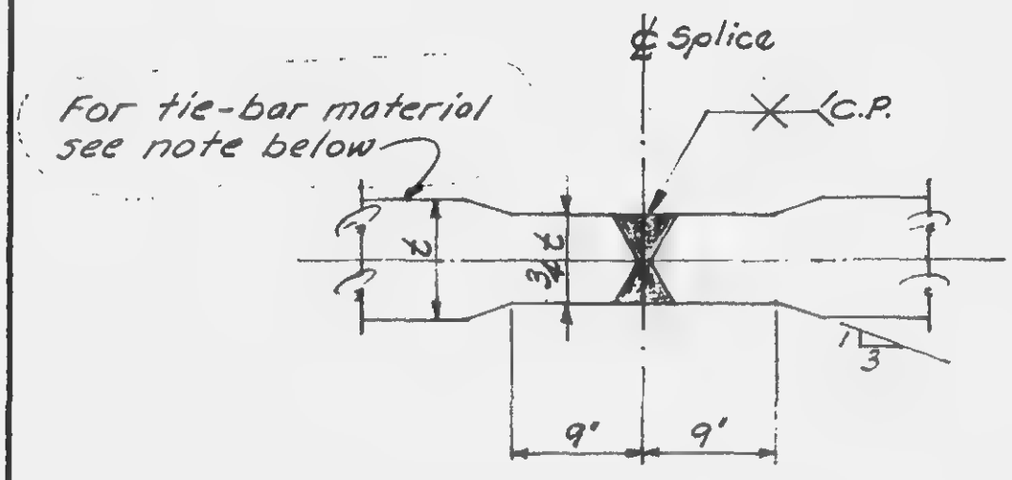

Typical detail for shop splice of single plate chord members

NOTE:

Tie bar material shall conform to the following:

1. To be made to coarse grain practice.
2. To be silicon killed.
3. To be forging quality.
4. To be ordered to vacuum degassed practice with extra top discard.
5. To be 100% ultrasonically inspected in specified areas in accordance with ASTM A435-65.
6. In the locations shown in the drawings, steel plate shall be free of gross internal discontinuities exceeding
   (a) 3 square inches measured as the projected area on the surface of the plate, or 3 inches in maximum dimension measured parallel to the plane of the plate, or both.
   (b) 1/32 inch when measured in the direction of the thickness of the plate.
   (c) The sum of the maximum dimensions of each discontinuity intersected by any plane perpendicular to the longitudinal axis of the plate shall not exceed 4 inches.
   (d) At surfaces on the plate where the plate is joined to the flanges of diagonal members, the plate shall be free of gross internal discontinuities exceeding 1 sq. inch in area within widths of 10 inches centered on the flanges of the diagonals and within a depth of 3 inches from the surface of the plate.

Detail A

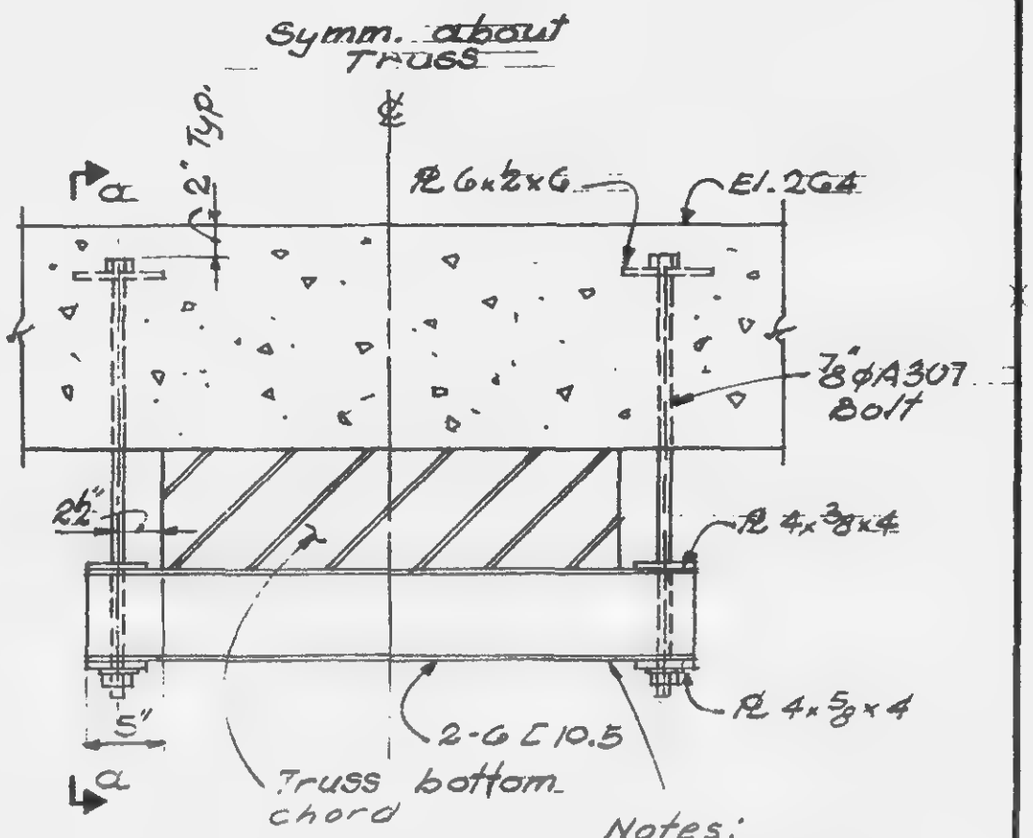

Detail B

Notes:
1. Intermediate supports spaced at 10'-0" max.
2. All bolts to be field tightened after completion of prestress work for slab at El. 264. Provide temp. sup'ts. in place of C before bolts are tightened.

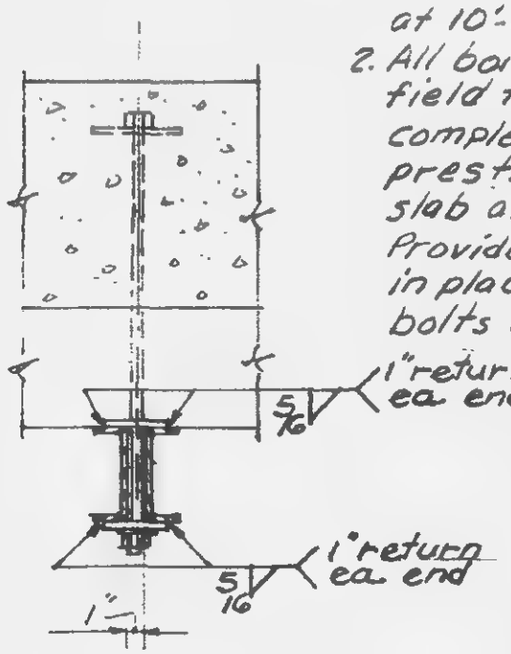

Section a-a

11-JK2-9

LICENSED PROFESSIONAL ENGINEER
LESLIE E. ROBERTSON
No. 34360
UNIVERSITY OF THE STATE OF NEW YORK

SKILLING - HELLE - CHRISTIANSEN - ROBERTSON Structural & Civil Engineers

PROJECT THE WORLD TRADE CENTER | TITLE TRUSS DETAIL 7 | DATE 5-15-67

REVISIONS
4-5-68
4-26-68
4-18-69

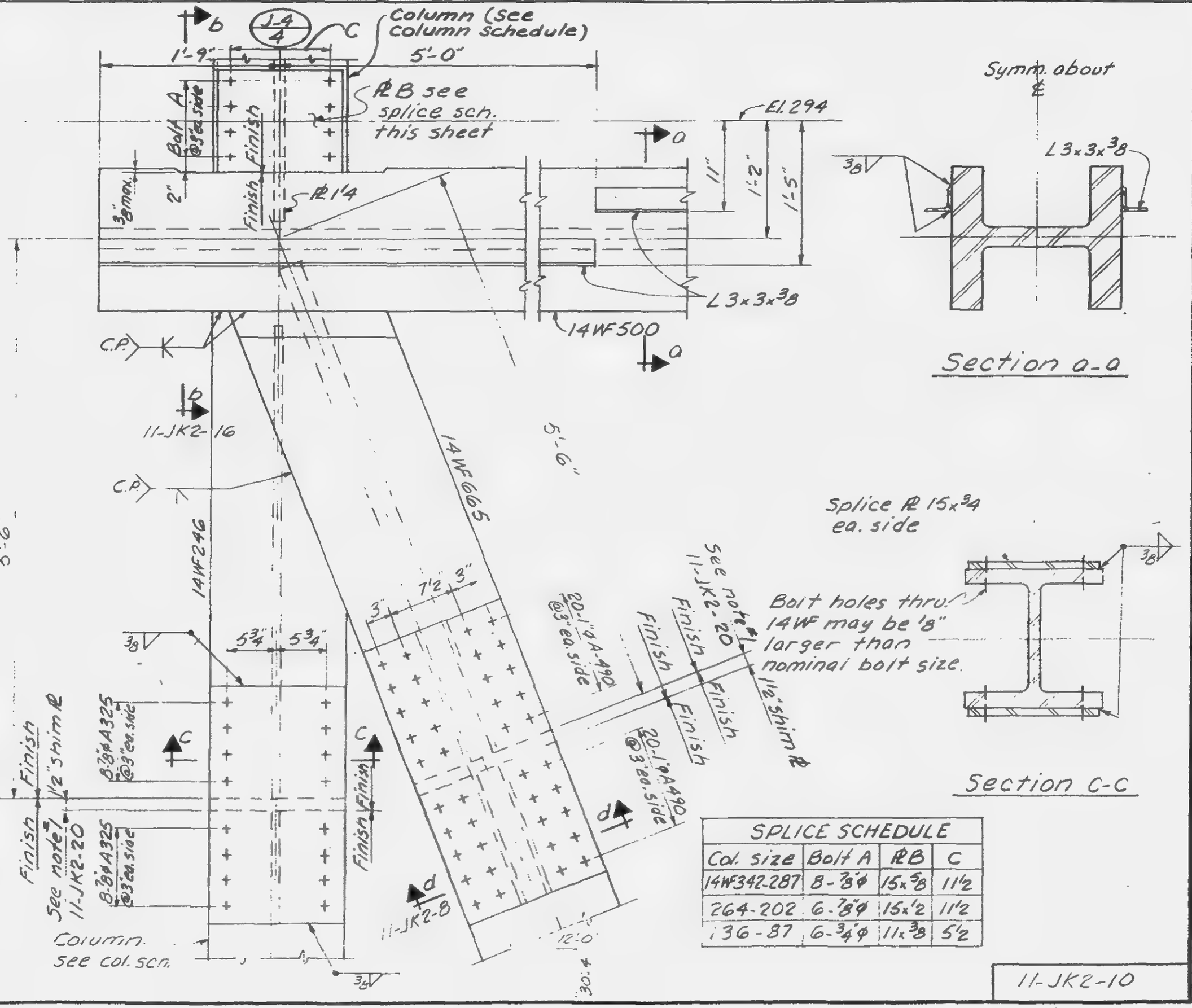

SPLICE SCHEDULE			
Col. size	Bolt A	PL B	C
14WF342-287	8-7/8ø	15x5/8	11 1/2
264-202	6-7/8ø	15x1/2	11 1/2
136-87	6-3/4ø	11x3/8	5 1/2

LICENSED PROFESSIONAL ENGINEER
LESLIE E. ROBERTSON
No. 34360
UNIVERSITY OF THE STATE OF NEW YORK

DRAWN A.F.
REVIEWED E.L.

11-JK2-10

SKILLING - HELLE - CHRISTIANSEN - ROBERTSON

PROJECT THE WORLD TRADE CENTER | TITLE | DATE

REVISIONS
4-5-68
4-26-68

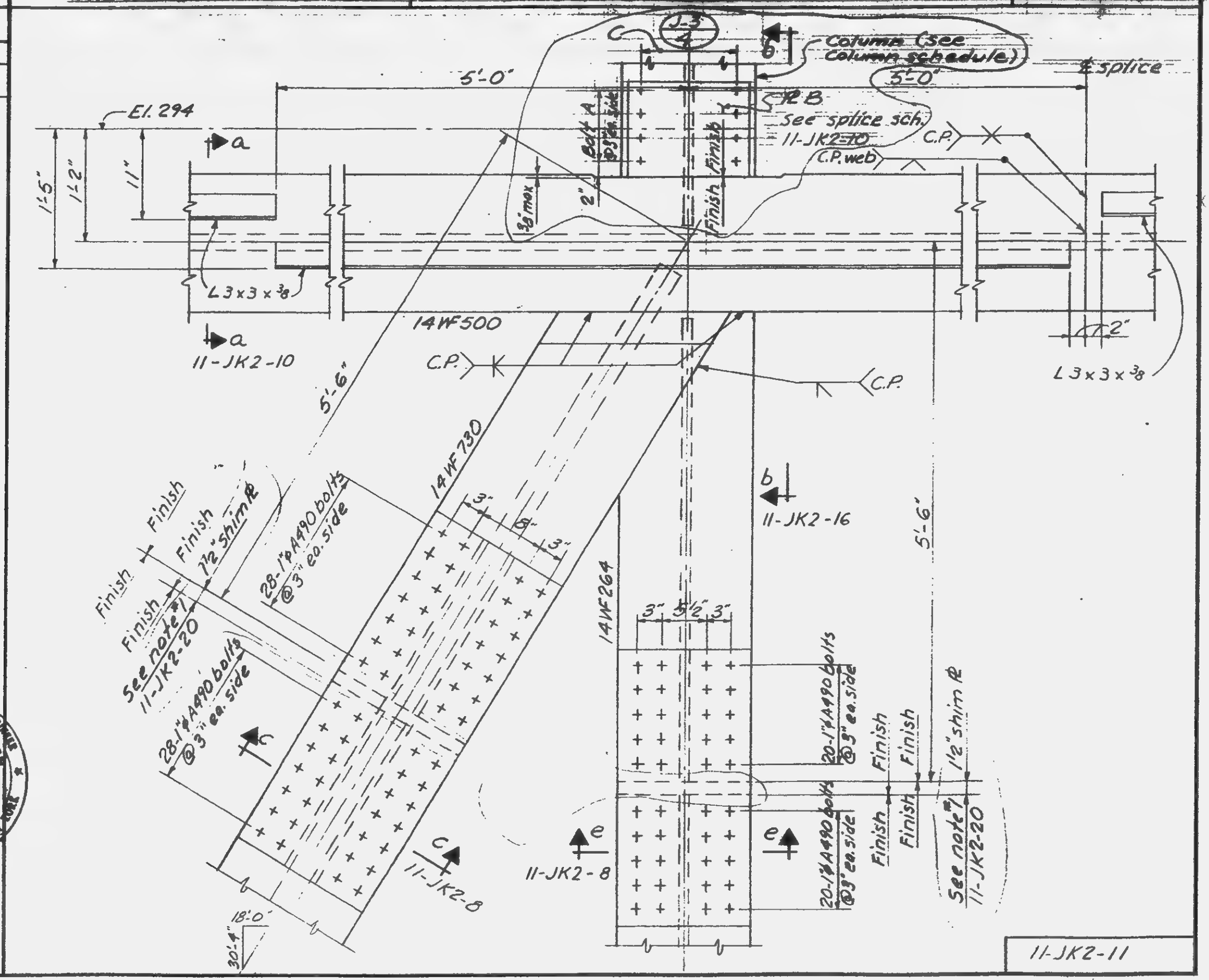

LICENSED PROFESSIONAL ENGINEER
LESLIE E. ROBERTSON
No. 34360
STATE OF NEW YORK

11-JK2-11

SKILLING - HELLE - CHRISTIANSEN - ROBERTSON Structural & Civil Engineers

PROJECT THE WORLD TRADE CENTER | TITLE TRUSS DETAIL 9 | DATE 5-15-67

REVISIONS
4-5-68
4-26-68
4-18-69

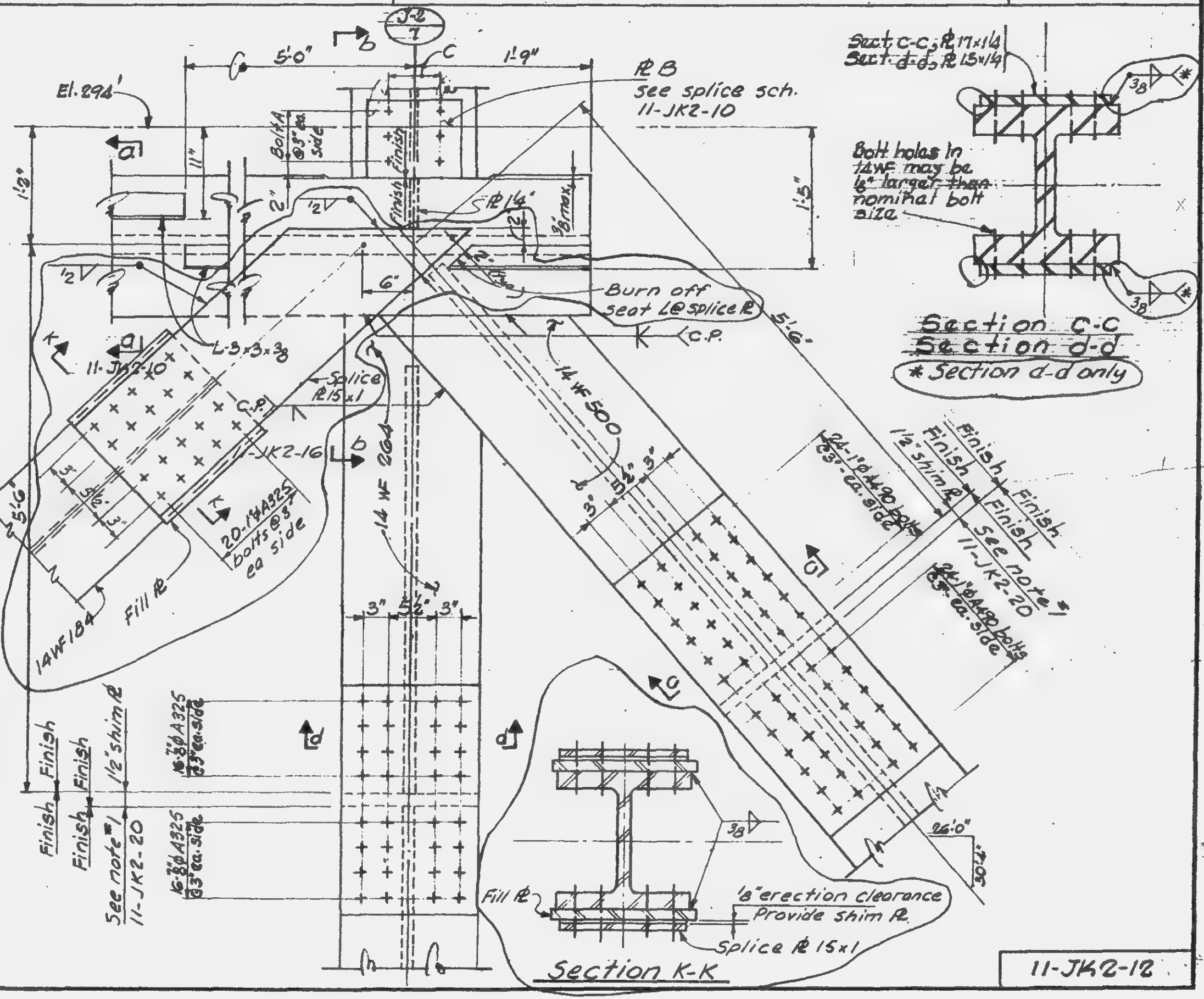

LICENSED PROFESSIONAL ENGINEER
LESLIE E. ROBERTSON
No. 34360
STATE OF NEW YORK

DRAWN A.F.
REVIEWED E.L.

11-JK2-12

SKILLING - HELLE - CHRISTIANSEN - ROBERTSON — Structural & Civil Engineers

PROJECT THE WORLD TRADE CENTER | TITLE TRUSS DETAIL 10 | DATE 3-15-67

REVISIONS
4-5-68
4-26-68
4-18-69

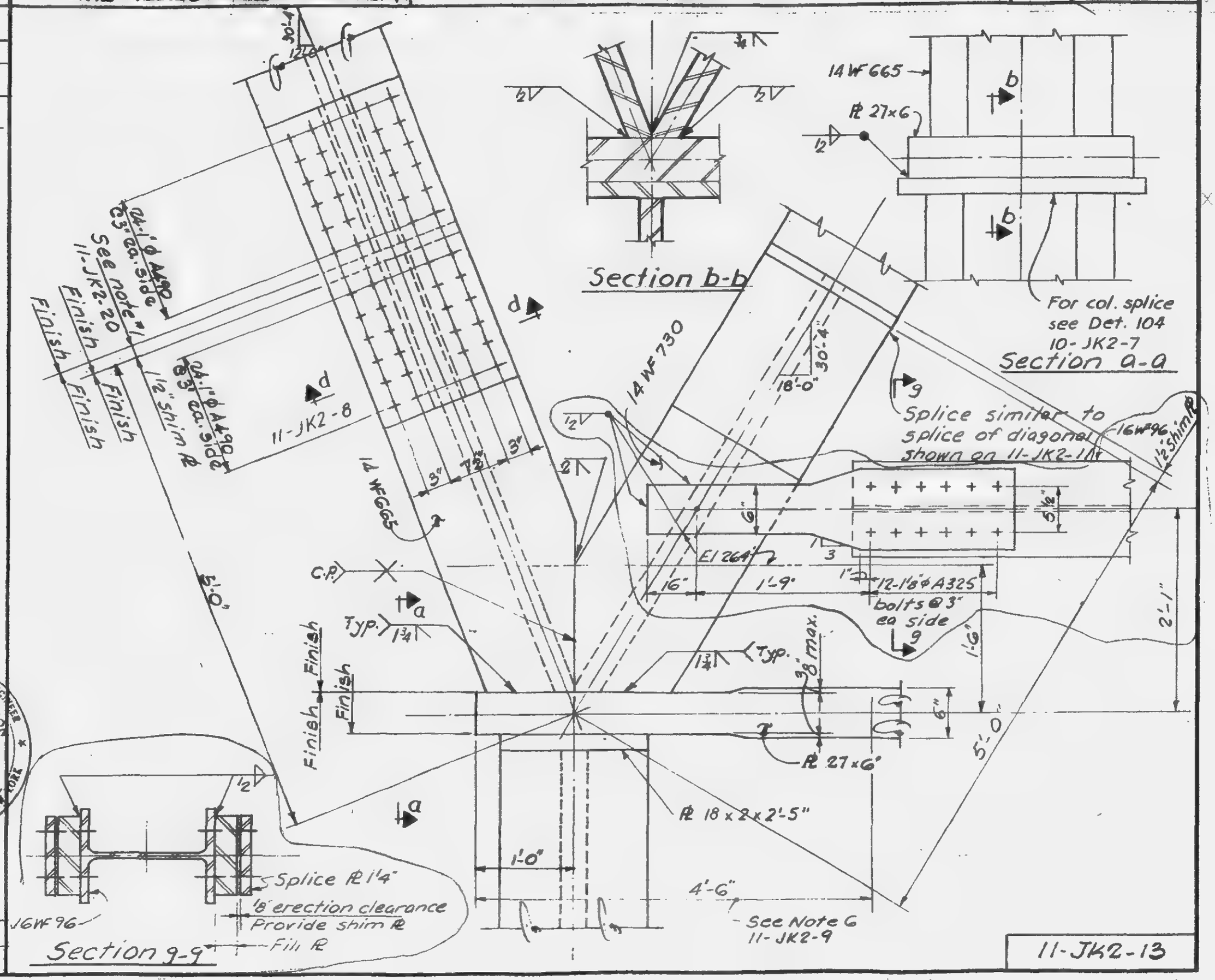

LICENSED PROFESSIONAL ENGINEER
LESLIE E. ROBERTSON
No. 34360
UNIVERSITY OF THE STATE OF NEW YORK

DRAWN A.F.
REVIEWED E.L.

11-JK2-13

SKILLING-HELLE - CHRISTIANSEN - ROBERTSON Structural & Civil Engineers

PROJECT THE WORLD TRADE CENTER | TITLE TRUSS DETAIL 11 & 12 | DATE 5-15-67

REVISIONS

4-5-68

4-26-68

4-18-69

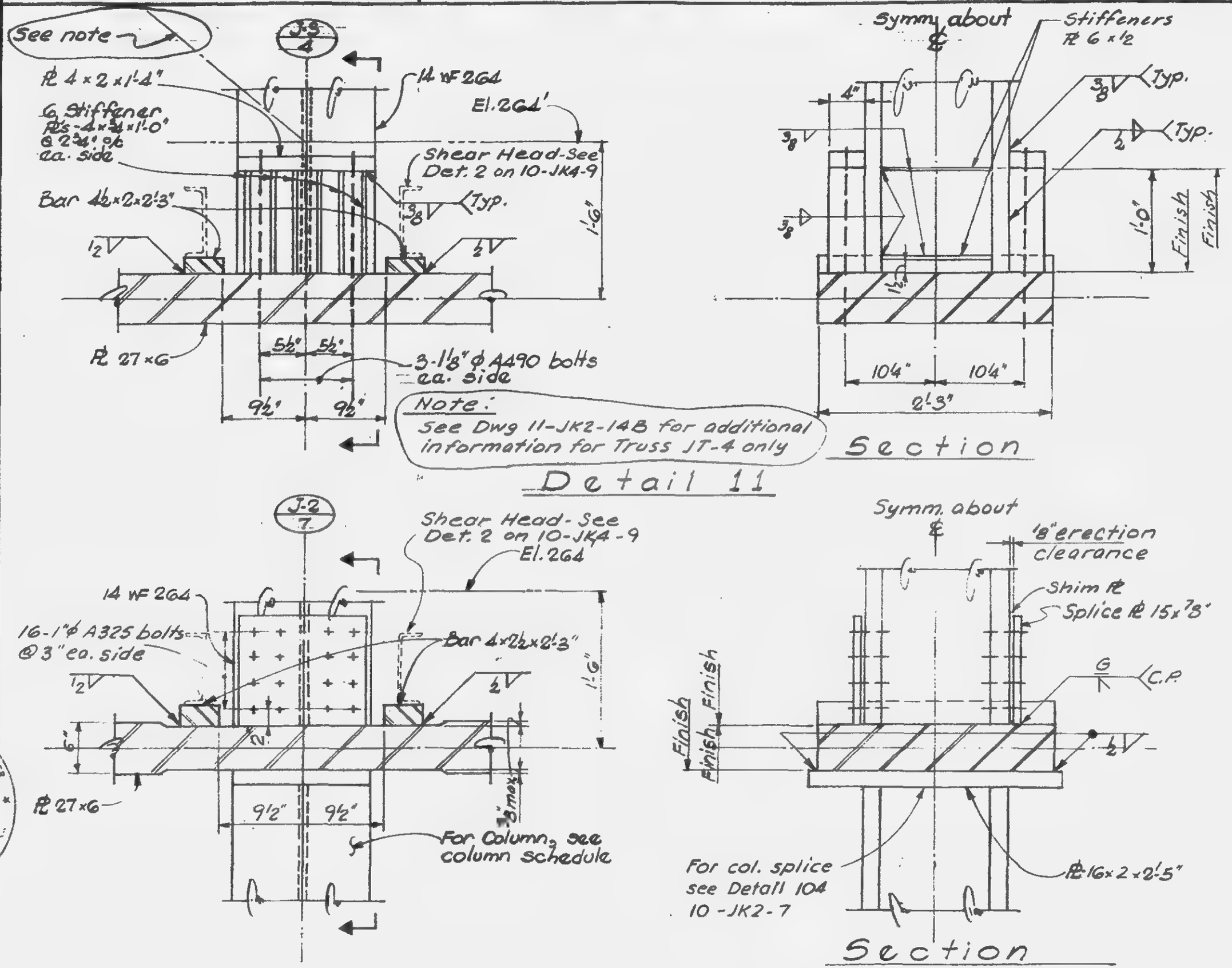

LICENSED PROFESSIONAL ENGINEER LESLIE E. ROBERTSON No. 34360 UNIVERSITY OF THE STATE OF NEW YORK

DRAWN A.F.

REVIEWED E.L.

11-JK2-14

SKILLING, HELLE, CHRISTIANSEN, ROBERTSON — Structural & Civil Engineers

PROJECT: THE WORLD TRADE CENTER | TITLE: TRUSS DETAILS (JT-2) | DATE: 4-18-69

REVISIONS

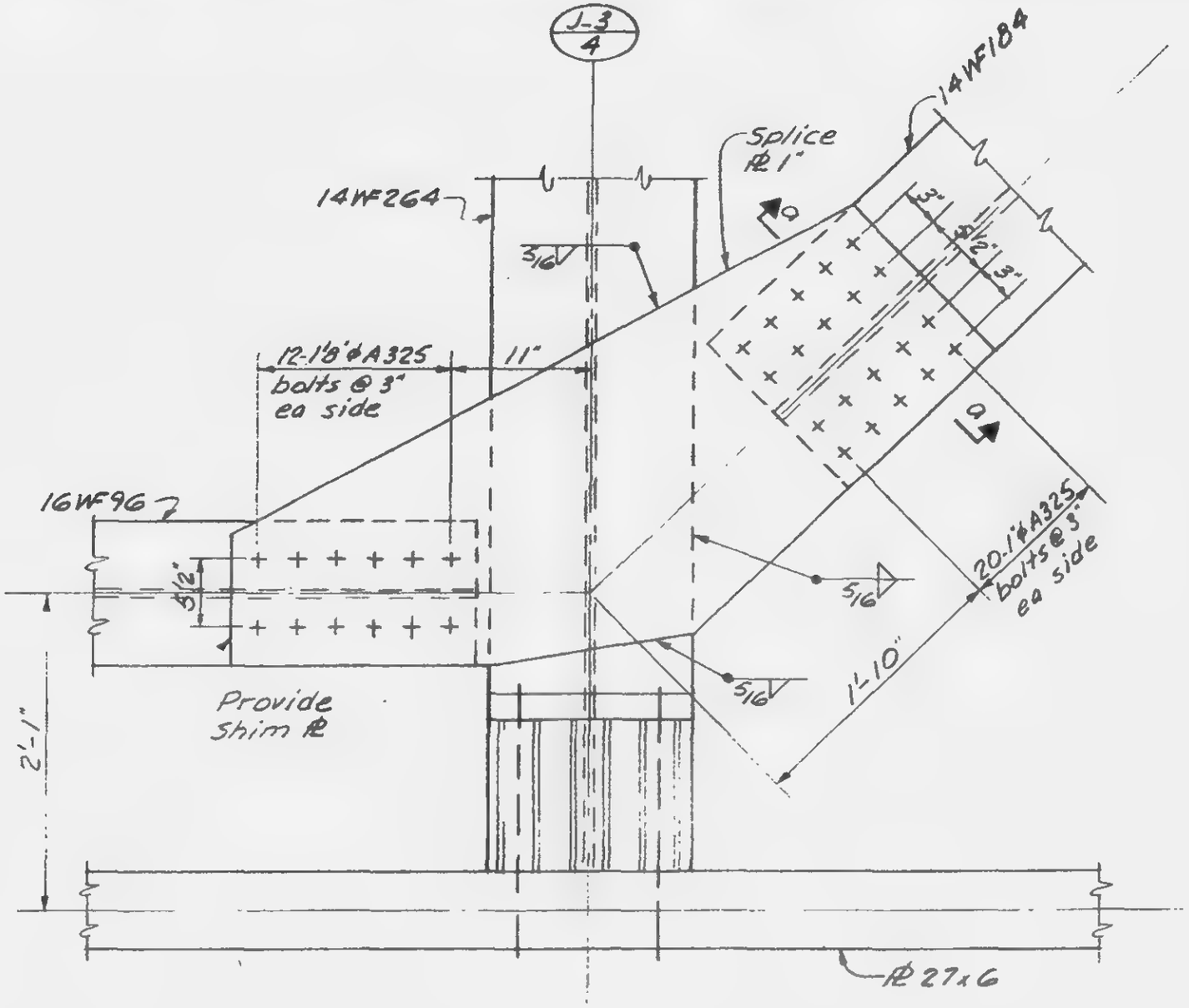

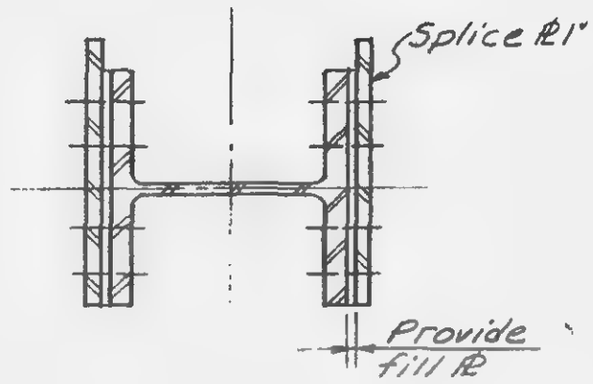

Section a-a

LICENSED PROFESSIONAL ENGINEER
LESLIE E. ROBERTSON
No. 34360
UNIVERSITY OF THE STATE OF NEW YORK

DESIGNED

DRAWN A.F.

REVIEWED E.L.

11-JK2-14A

SKILLING, HELLE, CHRISTIANSEN, ROBERTSON — Structural & Civil Engineers

PROJECT: THE WORLD TRADE CENTER | TITLE: TRUSS DETAIL (JT-4) | DATE: 4-18-69

REVISIONS

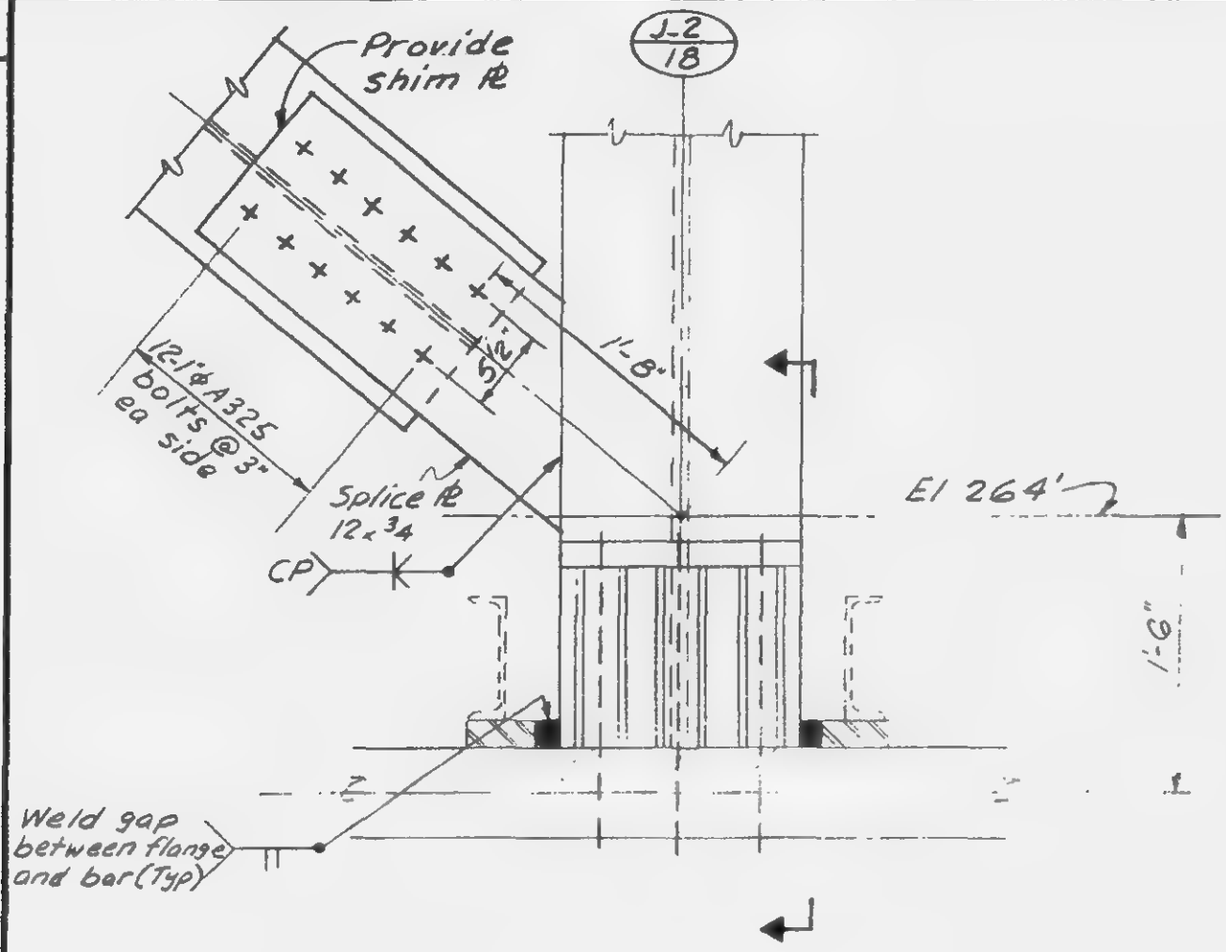

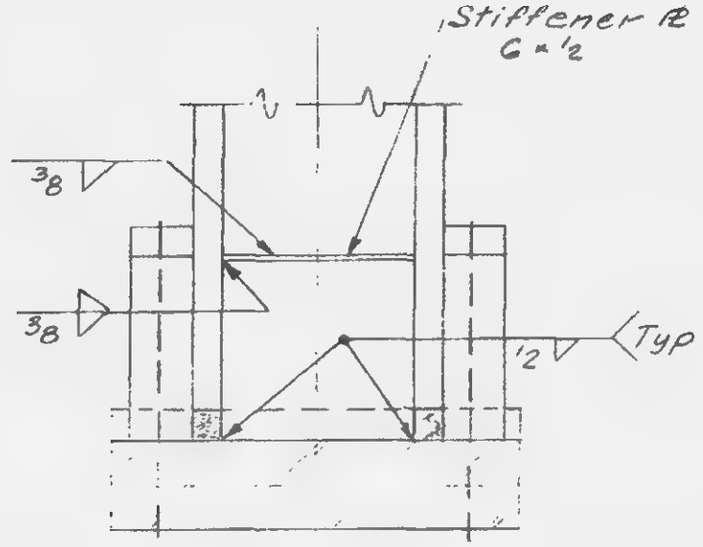

Section

LICENSED PROFESSIONAL ENGINEER
LESLIE E. ROBERTSON
No. 34360
UNIVERSITY OF THE STATE OF NEW YORK

DESIGNED

DRAWN A.F.

REVIEWED E.L.

11-JK2-14B

SKILLING - HELLE - CHRISTIANSEN - ROBERTSON — Structural & Civil Engineers

PROJECT THE WORLD TRADE CENTER | TITLE TRUSS DETAIL 13 | DATE 5-15-67

REVISIONS
4-5-68
4-26-68

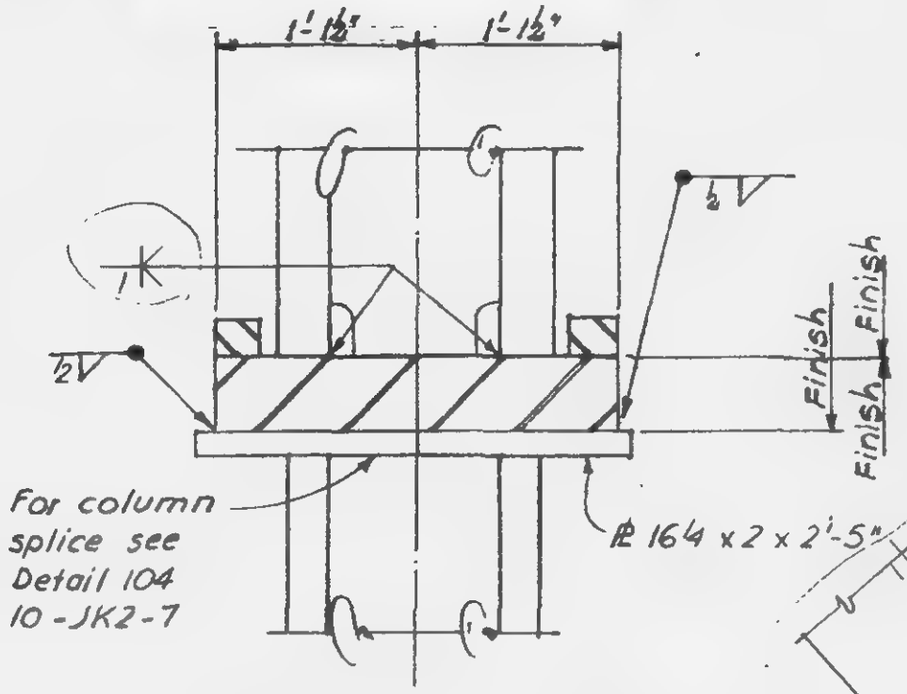

Section a-a

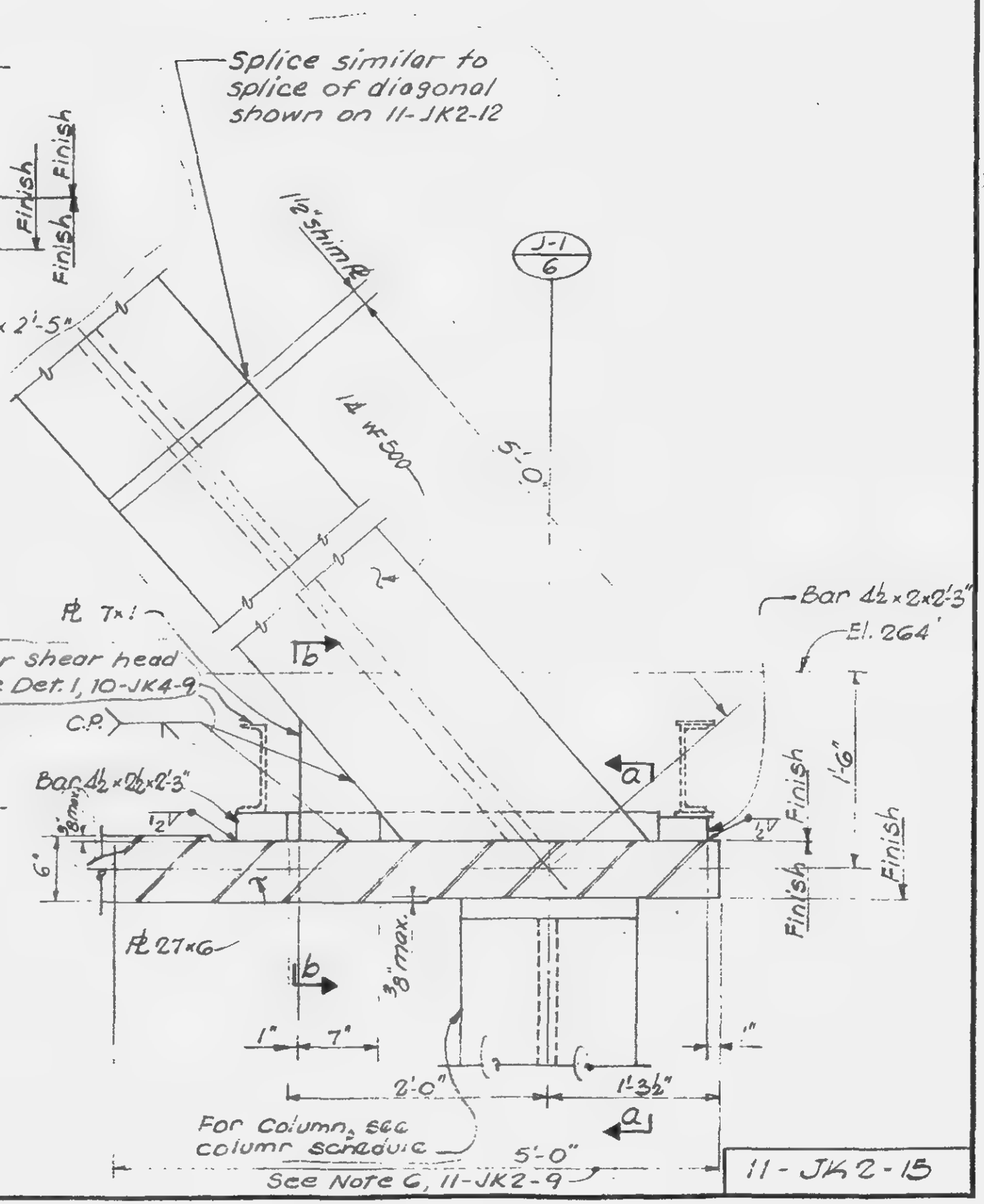

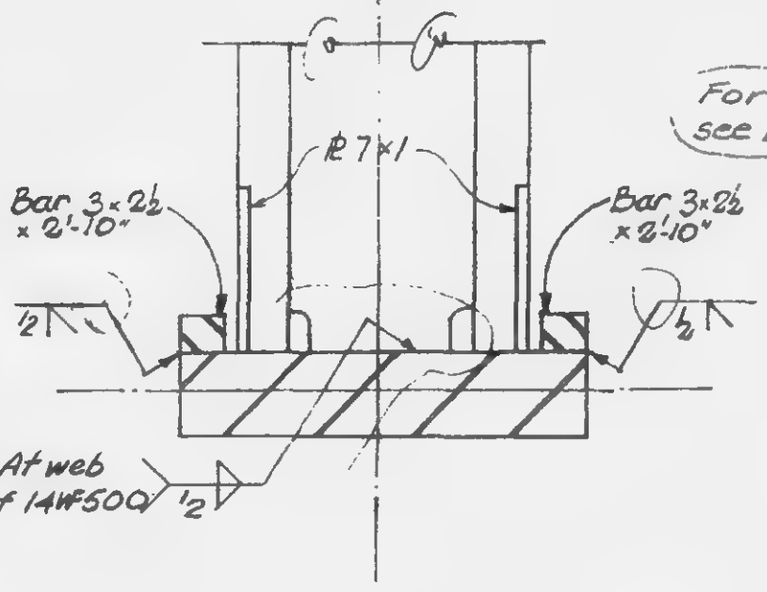

Section b-b

11-JK2-15

SKILLING - HELLE - CHRISTIANSEN - ROBERTSON Structural & Civil Engineers

PROJECT THE WORLD TRADE CENTER | TITLE TRUSS DETAILS | DATE 5-15-67

REVISIONS
4-5-68
4-26-68
4-18-69

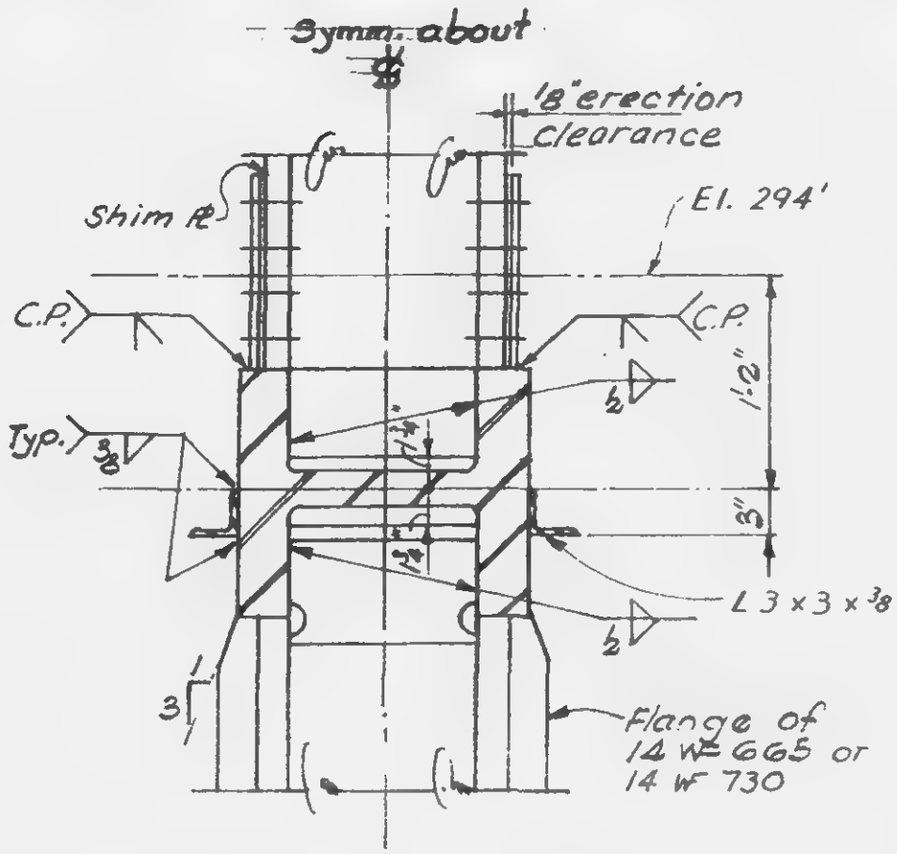

Section 6-6

Note:
Splice ℞ 15x1 not shown
(For Detail 9, Dwg 11-JK2-12 only)

DRAWN A.F.
REVIEWED E.L.

11-JK2-16

SKILLING - HELLE - CHRISTIANSEN - ROBERTSON Structural & Civil Engineers

PROJECT THE WORLD TRADE CENTER | TITLE TRUSS DETAIL 14 | DATE 5-15-67

REVISIONS
4-5-68
4-26-68

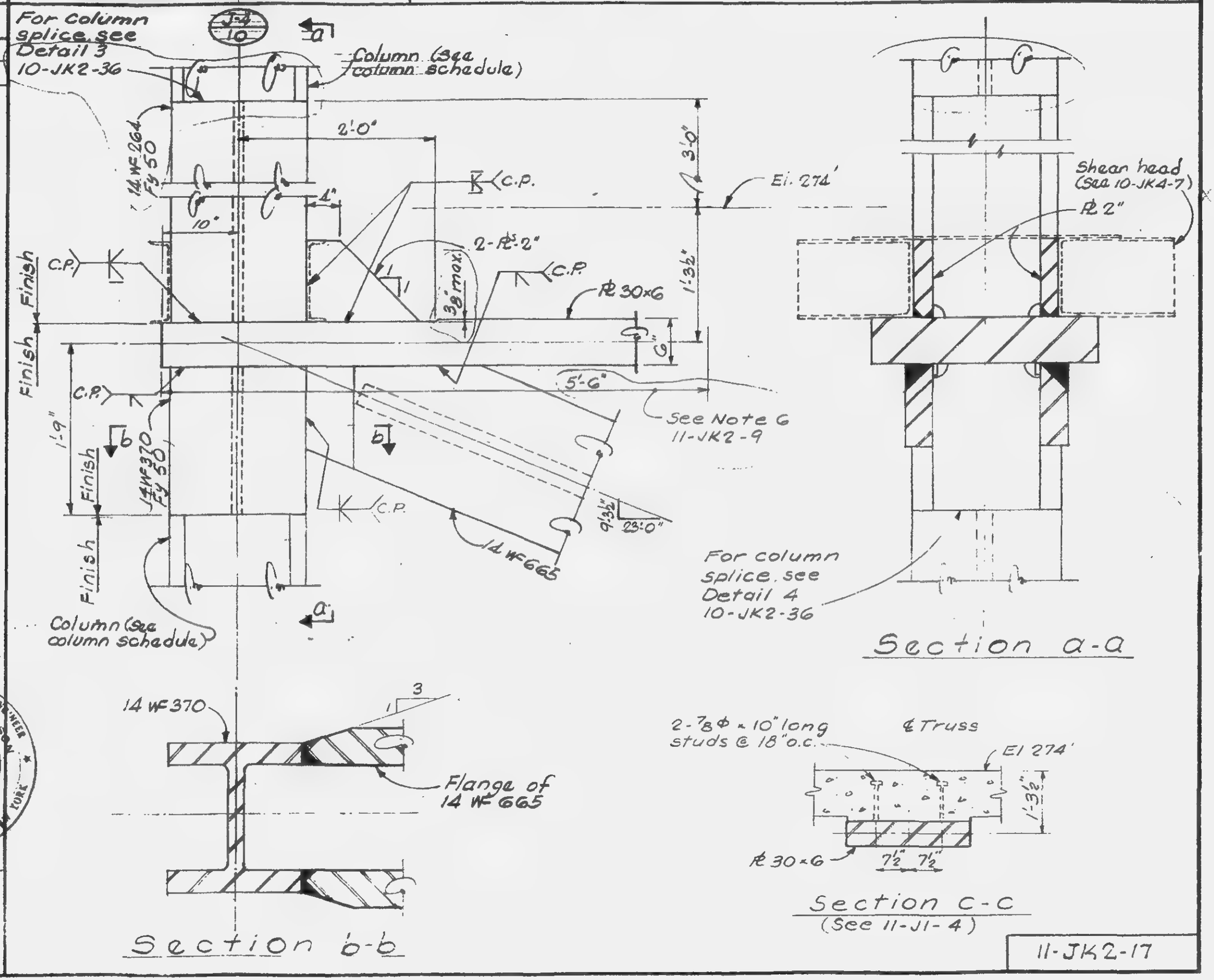

LICENSED PROFESSIONAL ENGINEER
LESLIE E. ROBERTSON
No. 34360
STATE OF NEW YORK

11-JK2-17

SKILLING - HELLE - CHRISTIANSEN - ROBERTSON Structural & Civil Engineers

PROJECT THE WORLD TRADE CENTER | TITLE TRUSS DETAIL 15 | DATE 5-15-67

REVISIONS
4-5-68
4-26-68

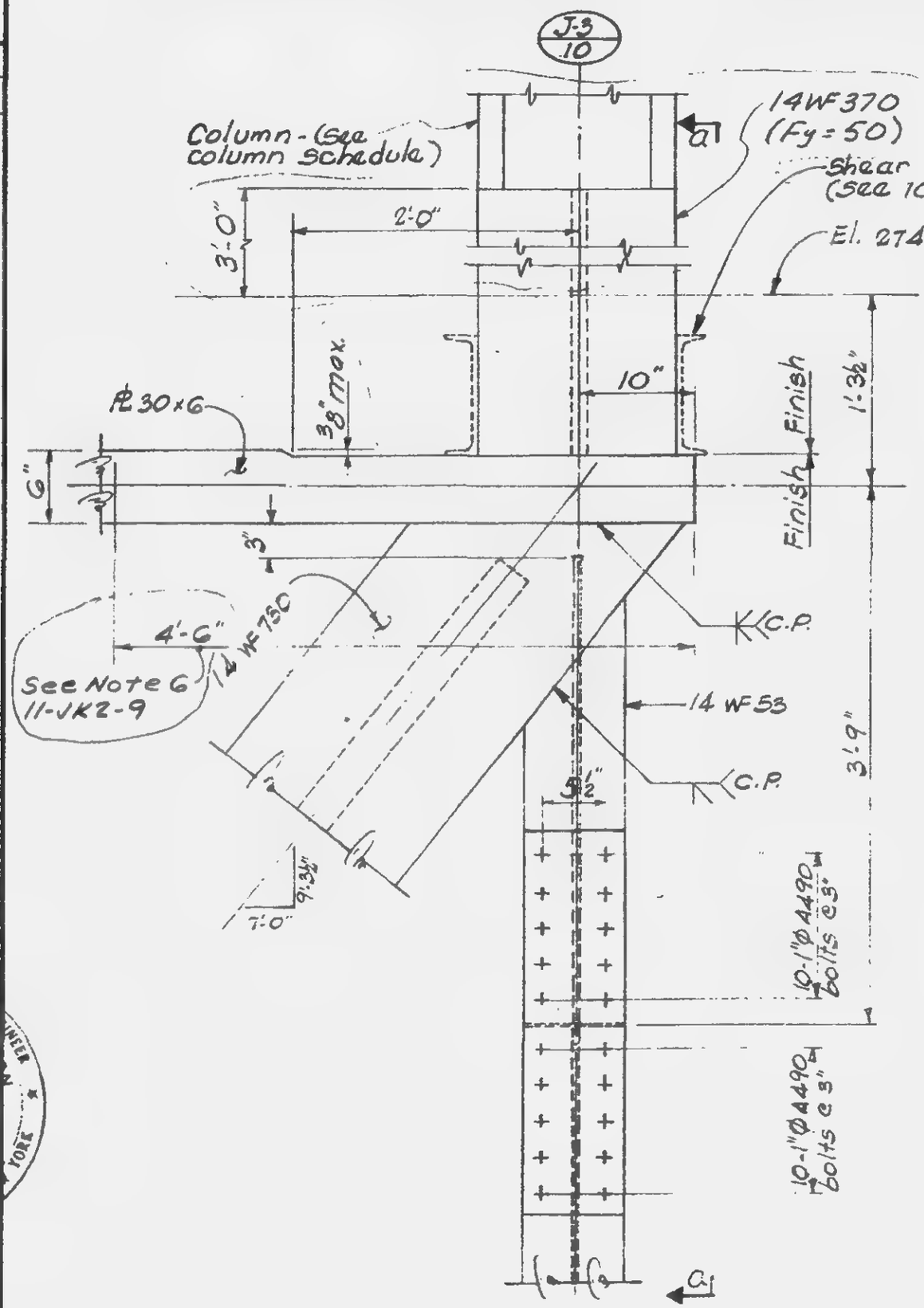

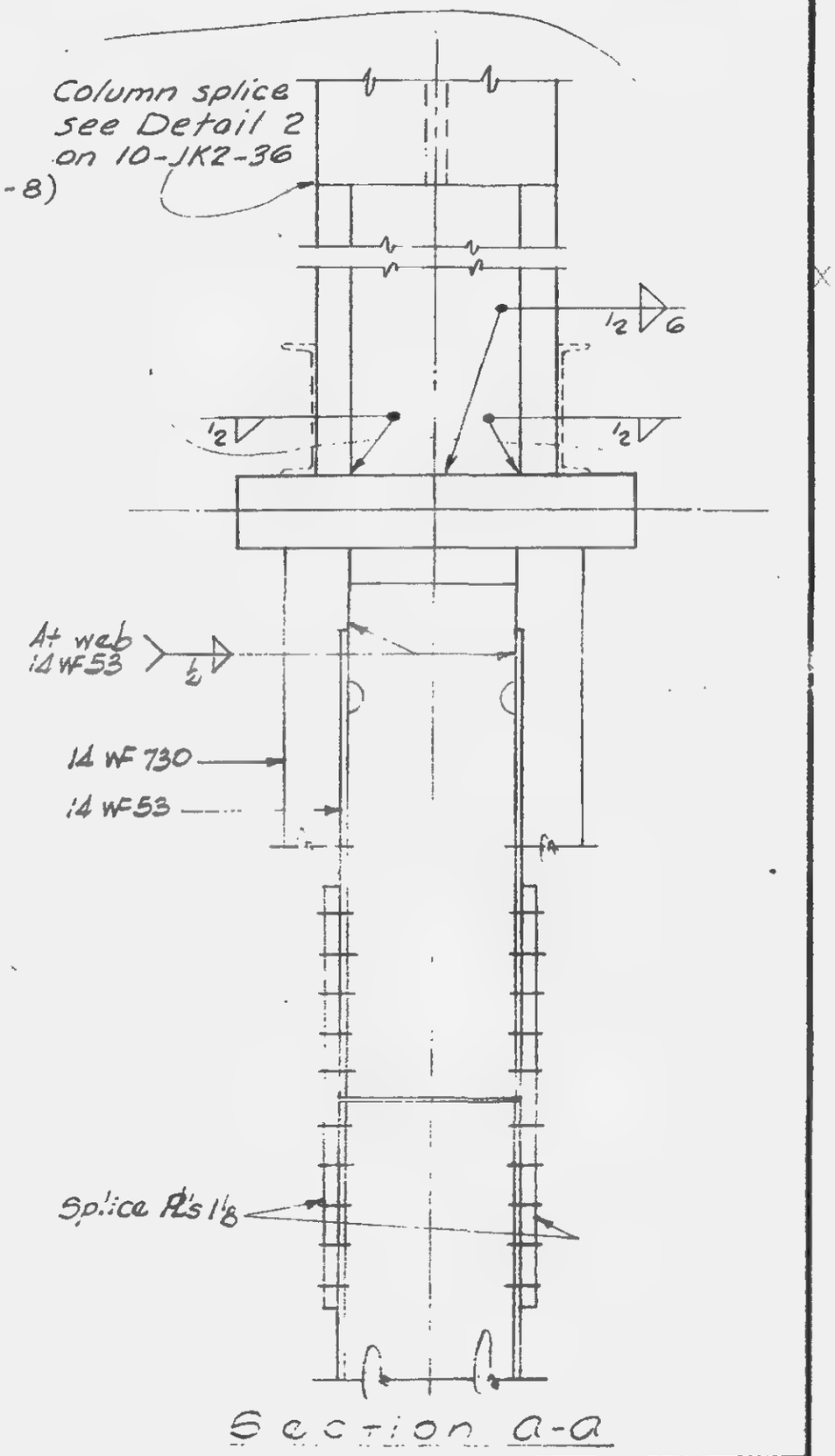

Section a-a

11-JK2-18

LICENSED PROFESSIONAL ENGINEER
LESLIE E. ROBERTSON
No. 34360
UNIVERSITY OF THE STATE OF NEW YORK

SKILLING - HELLE - CHRISTIANSEN - ROBERTSON Structural & Civil Engineers

PROJECT THE WORLD TRADE CENTER | TITLE TRUSS DETAIL 16 | DATE 5-15-67

REVISIONS

4-5-68

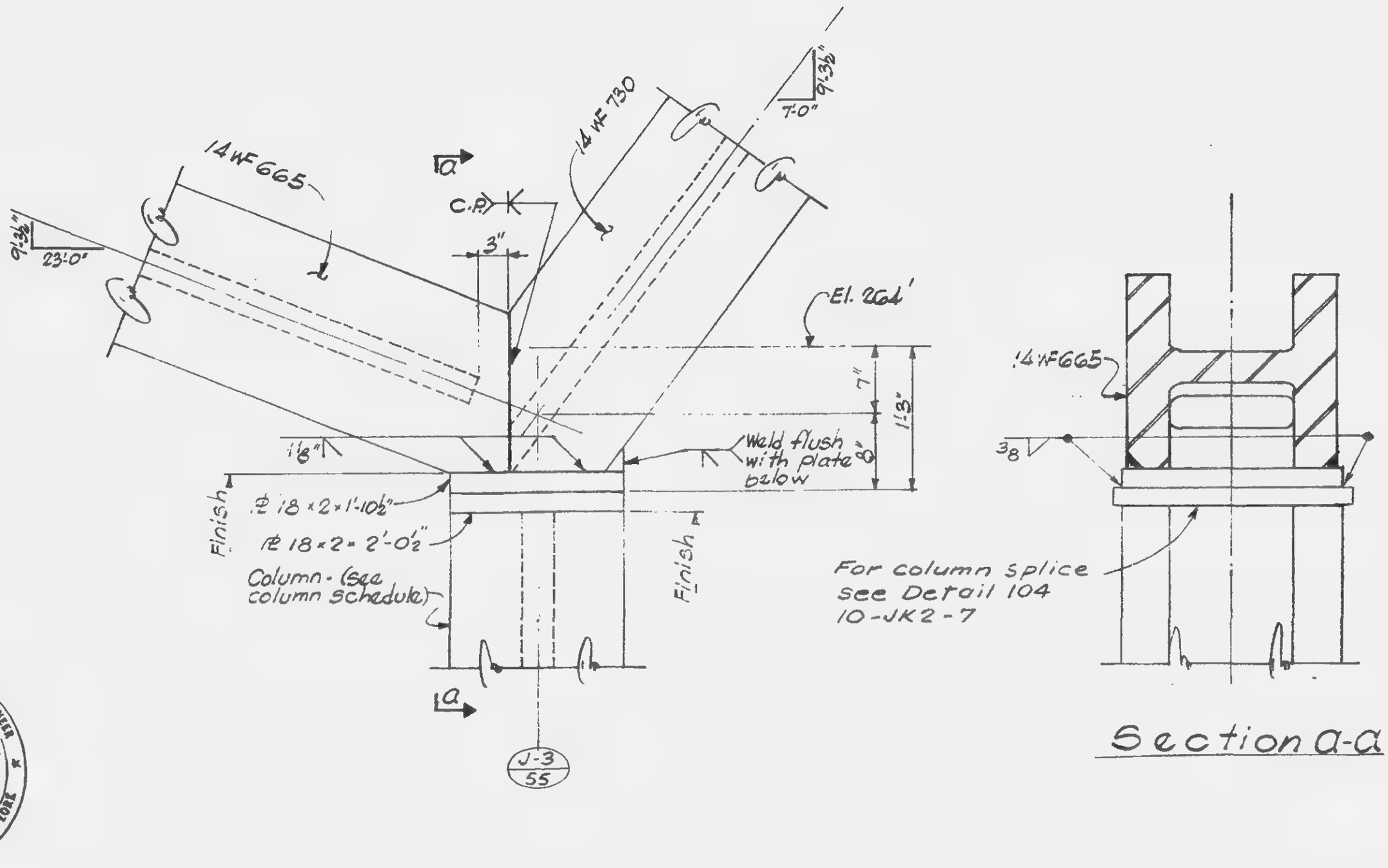

Section a-a

LICENSED PROFESSIONAL ENGINEER
LESLIE E. ROBERTSON
No. 34360
STATE OF NEW YORK

11-JK2-19

SKILLING - HELLE - CHRISTIANSEN - ROBERTSON Structural & Civil Engineers

PROJECT THE WORLD TRADE CENTER | TITLE TRUSS DETAILS | DATE 4-26-68

REVISIONS

NOTE 1

Trusses shall be shop assembled.
All joints provided with shim plates depend upon contact bearing, and shall bear evenly with respect to the centroid on the contact area. The contact area consists of the two flange areas of the members.
When assembled in the shop, at least 75 per cent of the entire contact area shall be in full bearing and the separation of any remaining portion shall not exceed 0.01 inch.
When re-assembled in the field, at least 65 per cent of the entire contact area shall be in full bearing and the separation of any remaining portion shall not exceed 0.02 inch.
Where the joining of the members in the field does not meet these tolerances, the erection contractor shall provide and install tapered shim plates to achieve full bearing as indicated on Detail A (this sheet).

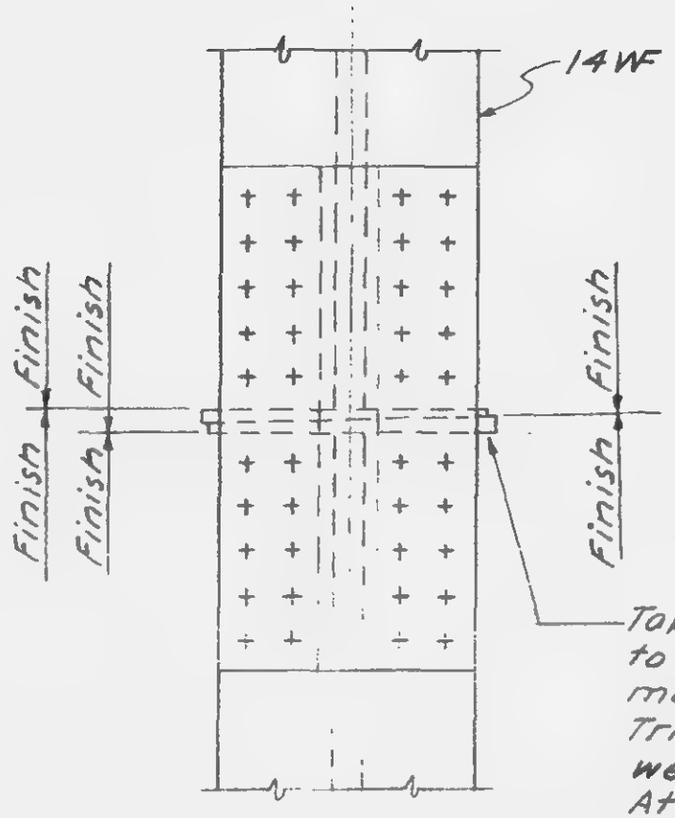

Detail A

LESLIE E. ROBERTSON

11-JK2-20

SKILLING - HELLE - CHRISTIANSEN - ROBERTSON — Consulting Civil Engineers

PROJECT THE WORLD TRADE CENTER | TITLE TRUSS DETAIL IV | DATE 5-15-67

REVISIONS

5-1-68

4-18-69

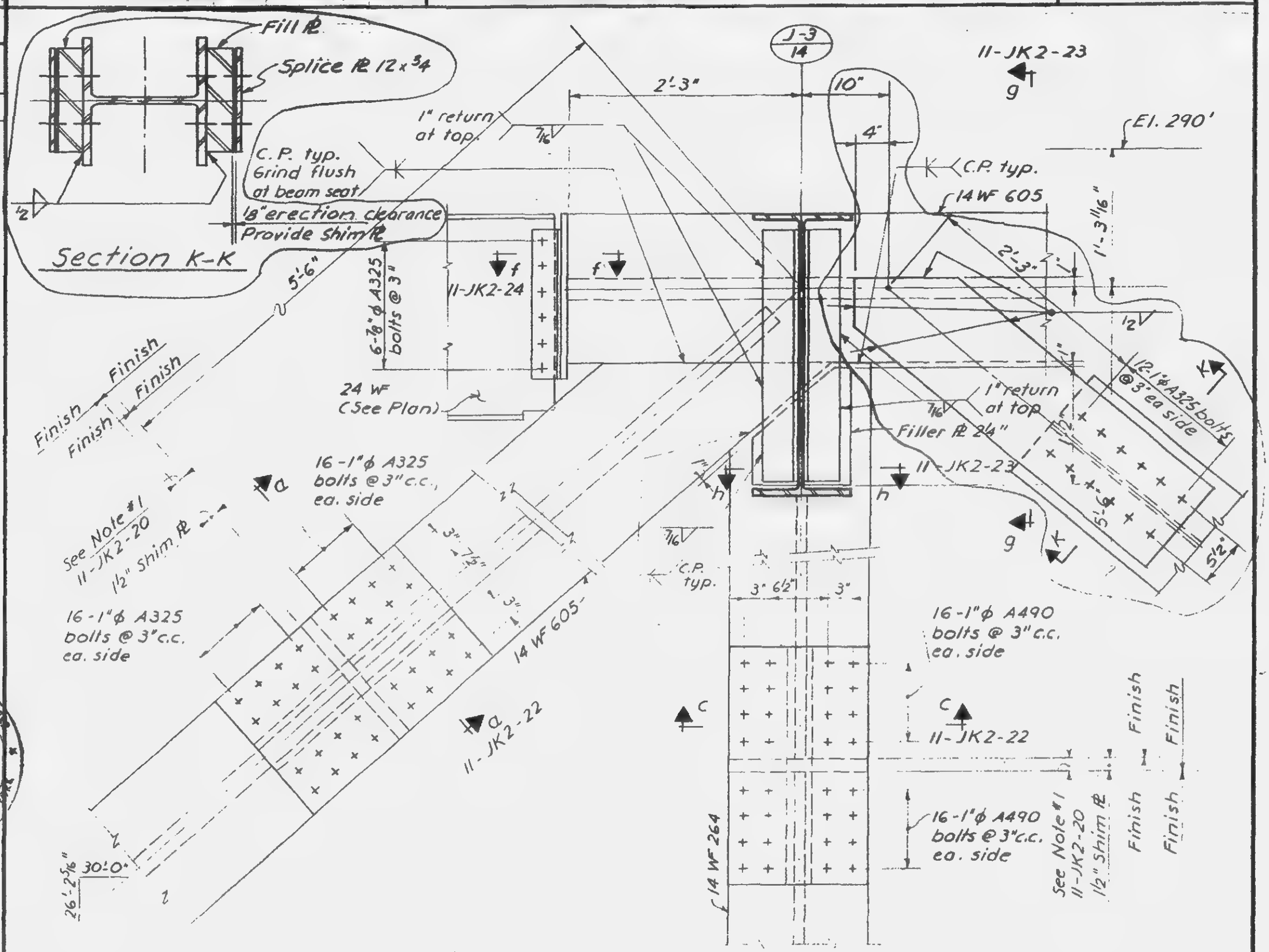

LICENSED PROFESSIONAL ENGINEER
LESLIE E. ROBERTSON
No. 34360
UNIVERSITY OF THE STATE OF NEW YORK

DRAWN A.L.
REVIEWED E.L.

11-JK2-21

SKILLING - HELLE - CHRISTIANSEN - ROBERTSON Structural & Civil Engineers

PROJECT THE WORLD TRADE CENTER | TITLE TRUSS DETAILS | DATE 5-15-67

REVISIONS

5-1-68

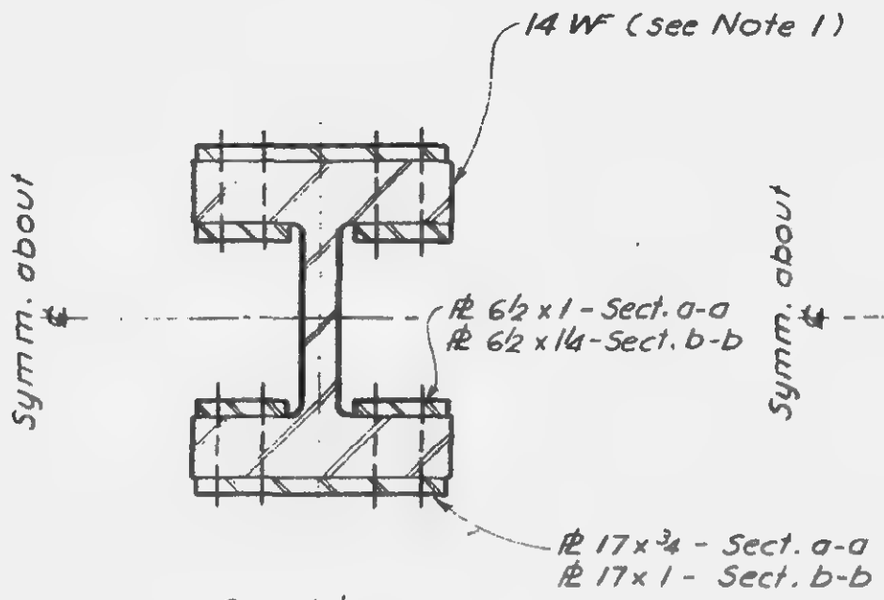

Section a-a

Section b-b

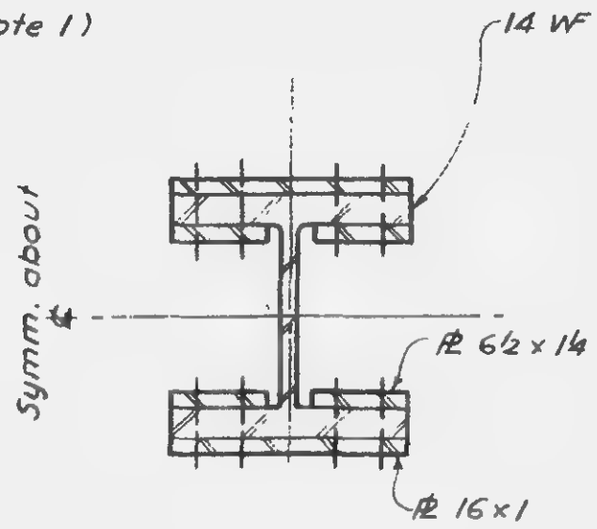

Section c-c

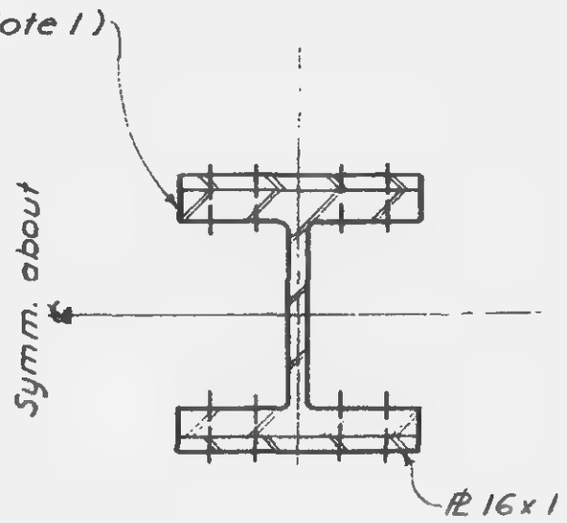

Section d-d

Note:

1. Bolt holes thru 14 WF may be ⅛" larger than nominal bolt size.

LICENSED PROFESSIONAL ENGINEER
LESLIE E. ROBERTSON
No. 54380
STATE OF NEW YORK

11-JK2-22

SKILLING - HELLE - CHRISTIANSEN - ROBERTSON — Structural & Civil Engineers

PROJECT THE WORLD TRADE CENTER | TITLE TRUSS DETAILS | DATE 5-15-67

REVISIONS

5-1-68

4-18-69

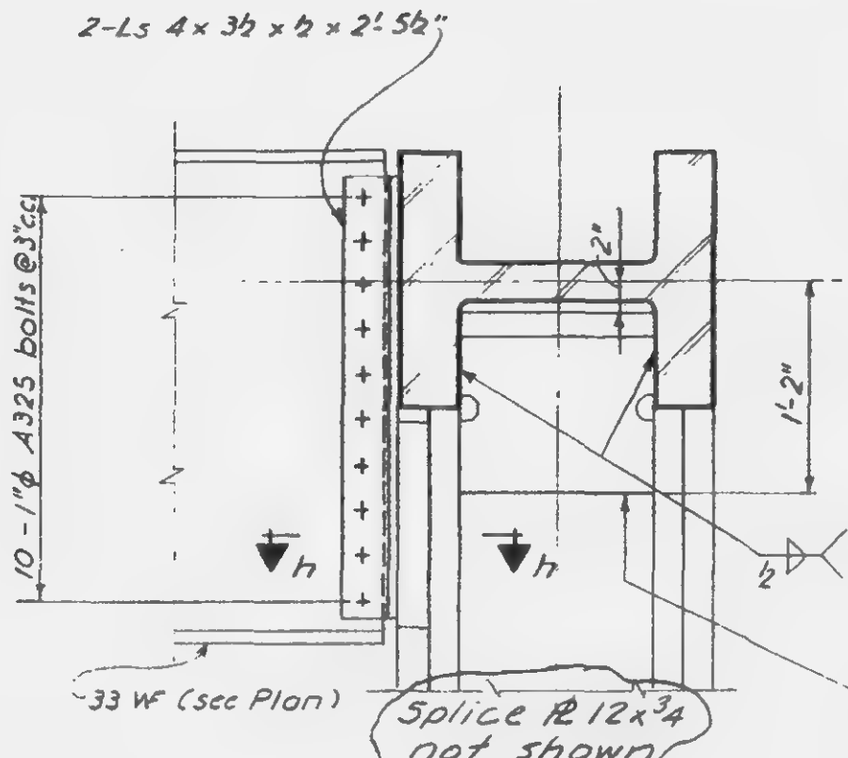

Section g-g

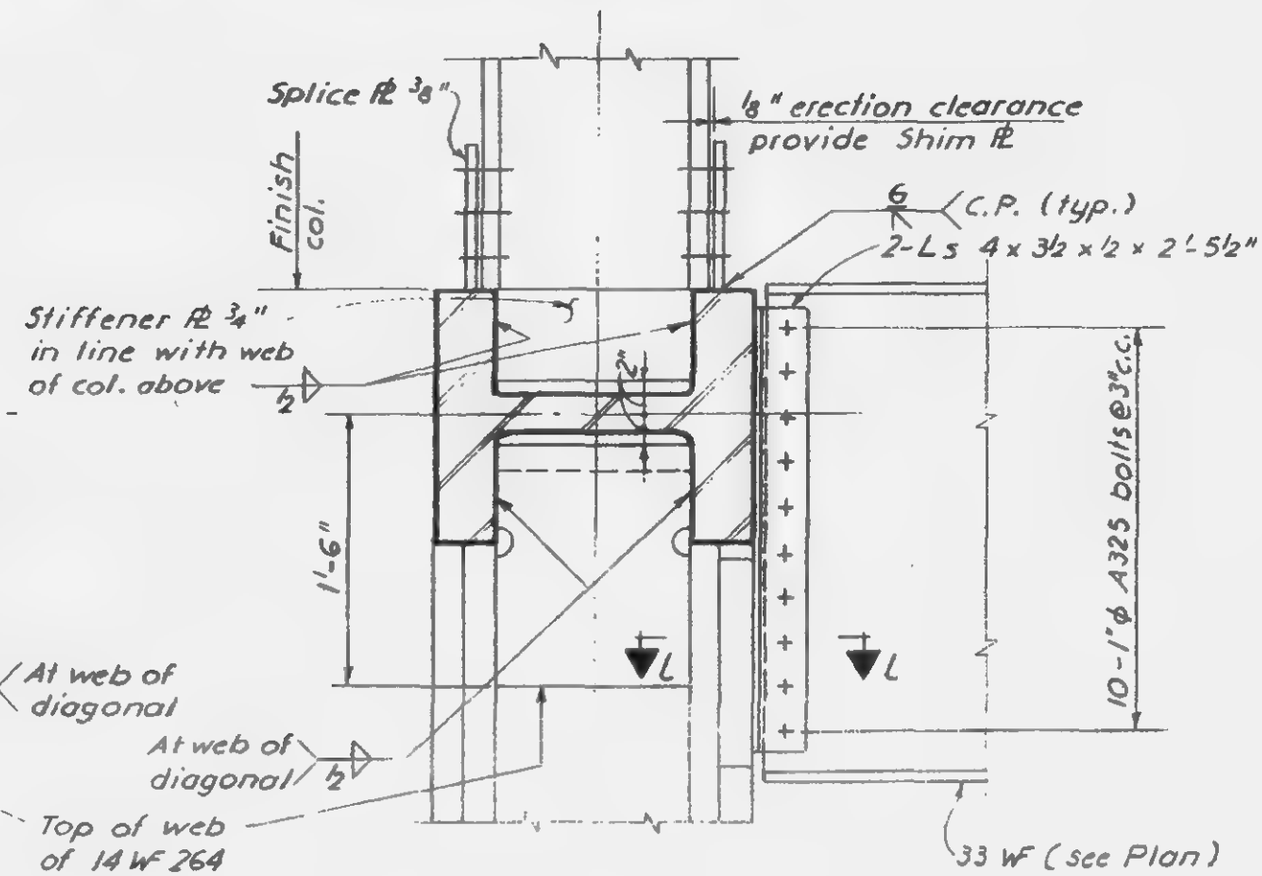

Section k-k

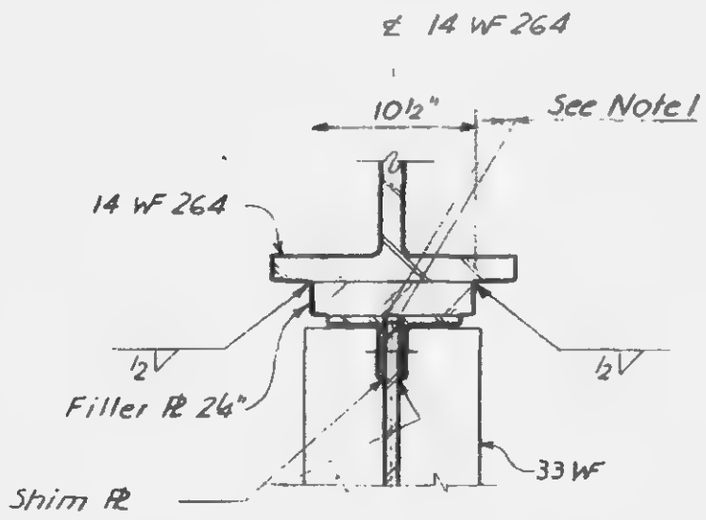

Section h-h

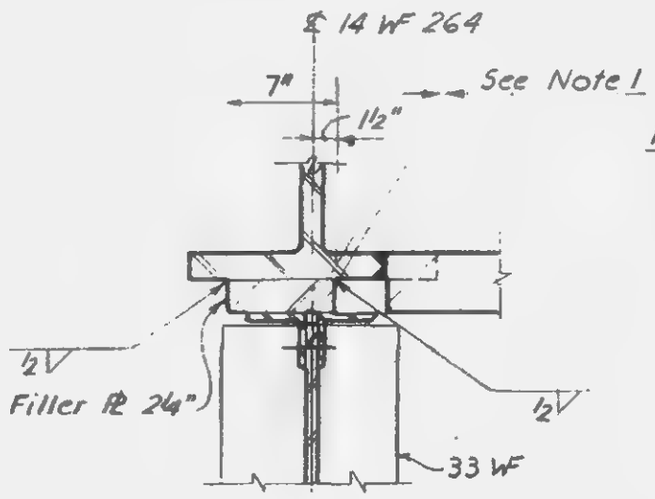

Section l-l

Note 1 :
Erection clearance each side of beam web should not be more than 1/16". Provide shim between beam web and L's if required to insure surface contact for H.S. bolts.

REGISTERED PROFESSIONAL ENGINEER LESLIE E. ROBERTSON No. 84360 STATE OF NEW YORK

DRAWN A.F.
REVIEWED E.L.

11 - JK2 - 23

SKILLING - HELLE - CHRISTIANSEN - ROBERTSON Structural & Civil Engineers

PROJECT THE WORLD TRADE CENTER | TITLE TRUSS DETAIL 18 | DATE 5-15-67

REVISIONS

5-1-68

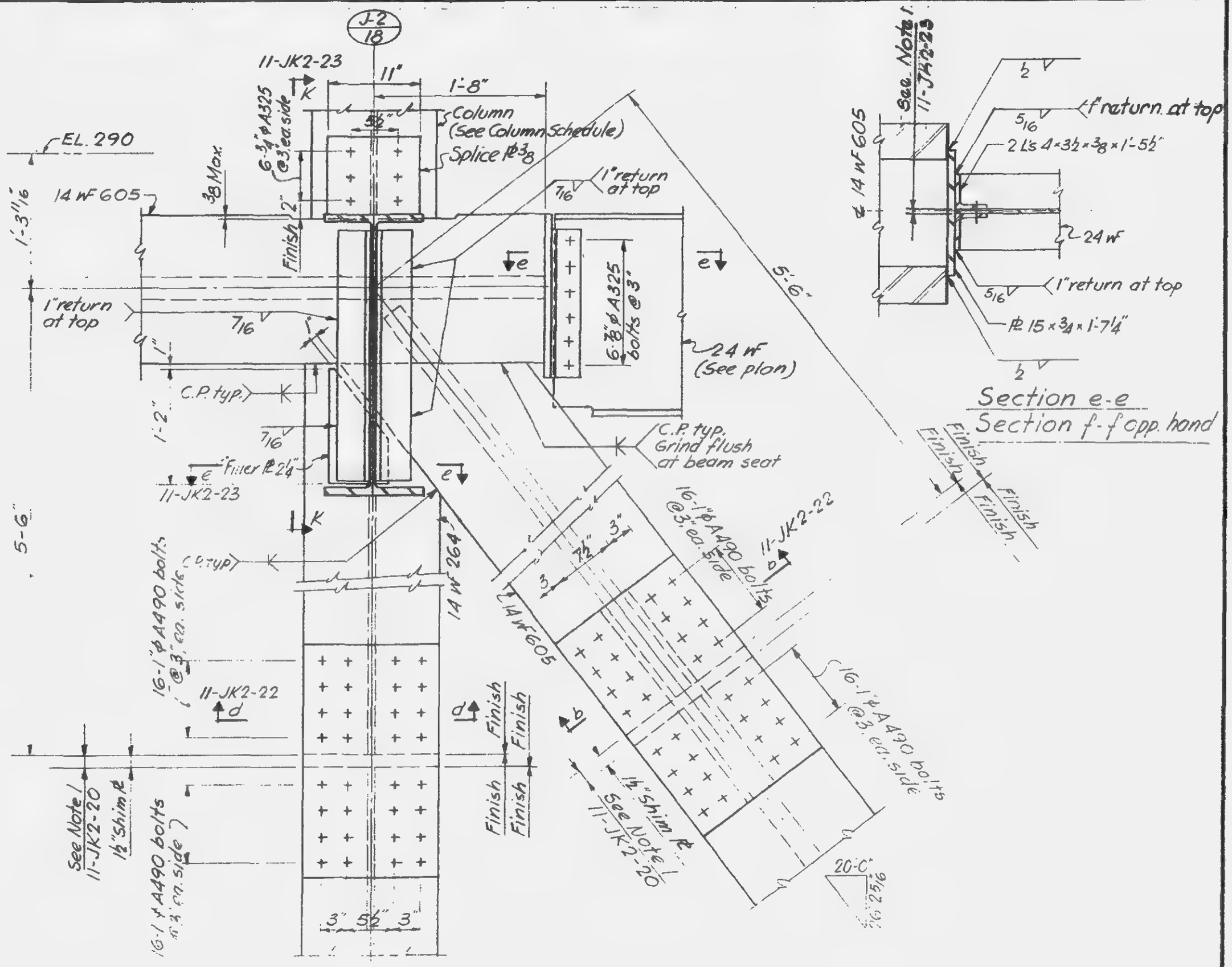

11-JK2-24

LICENSED PROFESSIONAL ENGINEER LESLIE E. ROBERTSON No. 34360 UNIVERSITY OF THE STATE OF NEW YORK

SKILLING - HELLE - CHRISTIANSEN - ROBERTSON — Structural & Civil Engineers

PROJECT THE WORLD TRADE CENTER | TITLE TRUSS DETAIL 19 | DATE 5-15-67

REVISIONS

5-1-68

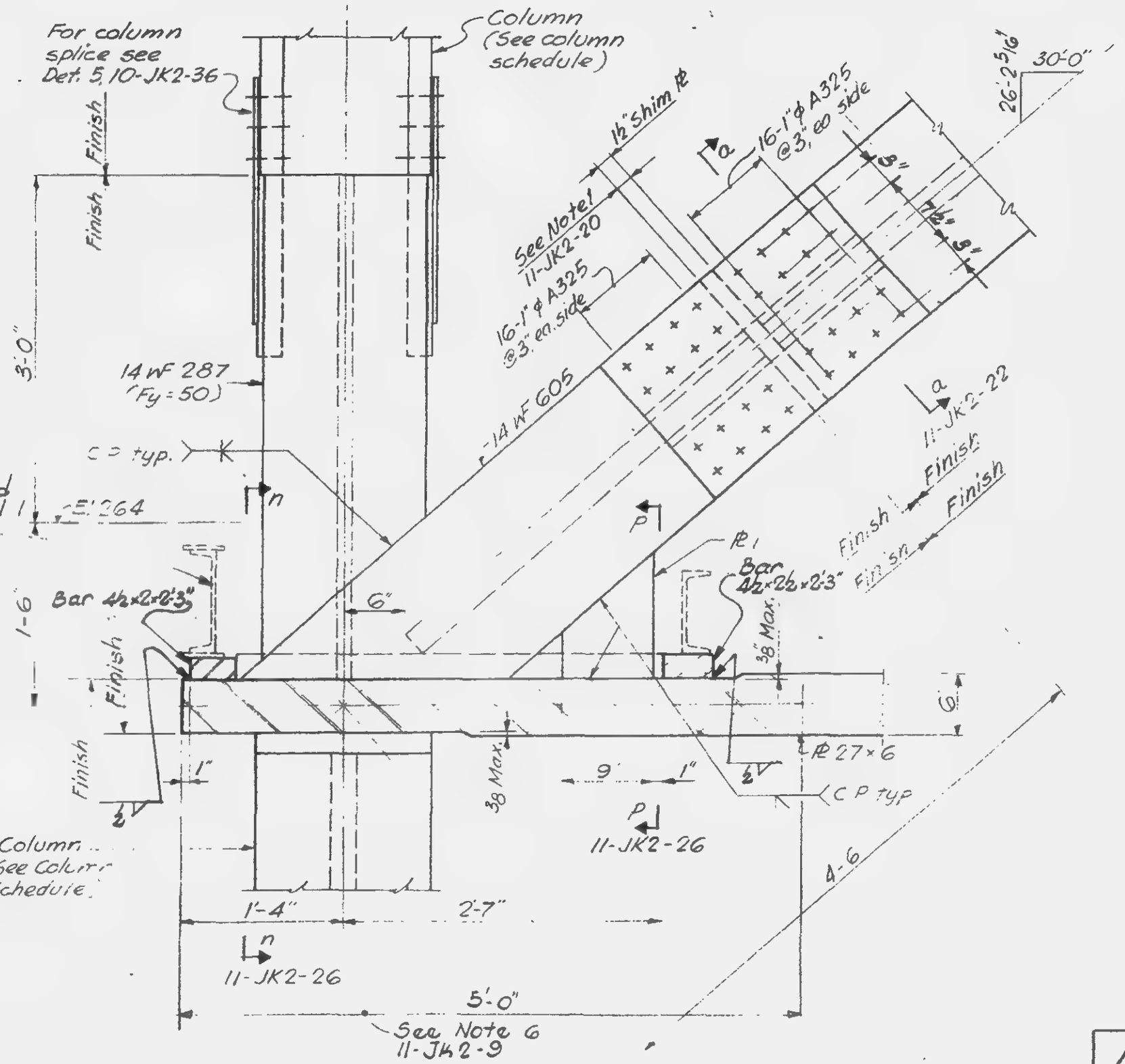

11-JK2-25

SKILLING - HELLE - CHRISTIANSEN - ROBERTSON Structural & Civil Engineers

PROJECT THE WORLD TRADE CENTER | TITLE TRUSS DETAILS | DATE 5-15-67

REVISIONS

5-1-68

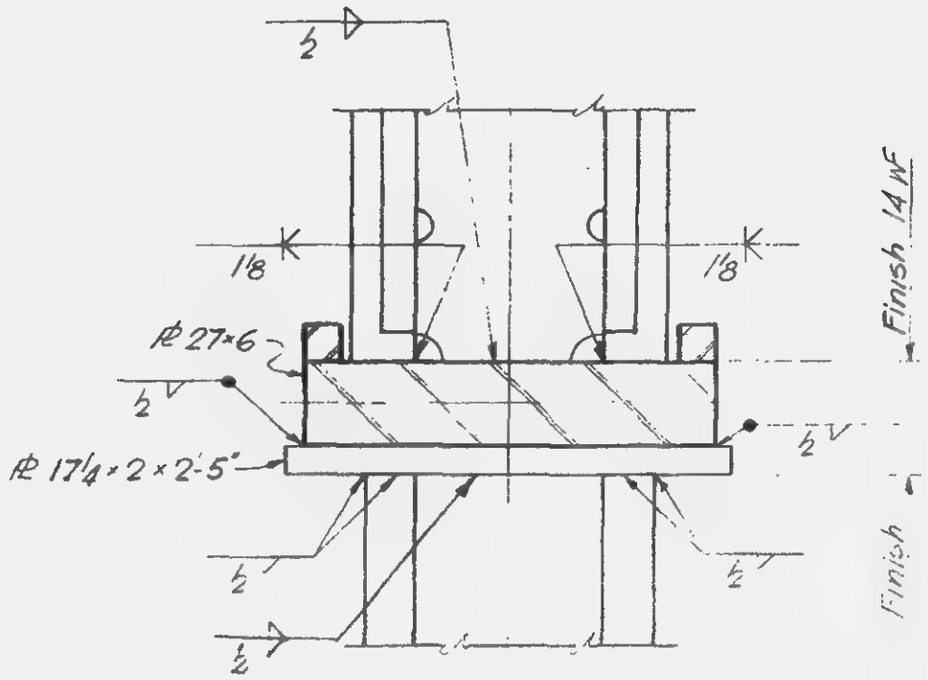

Section n-n

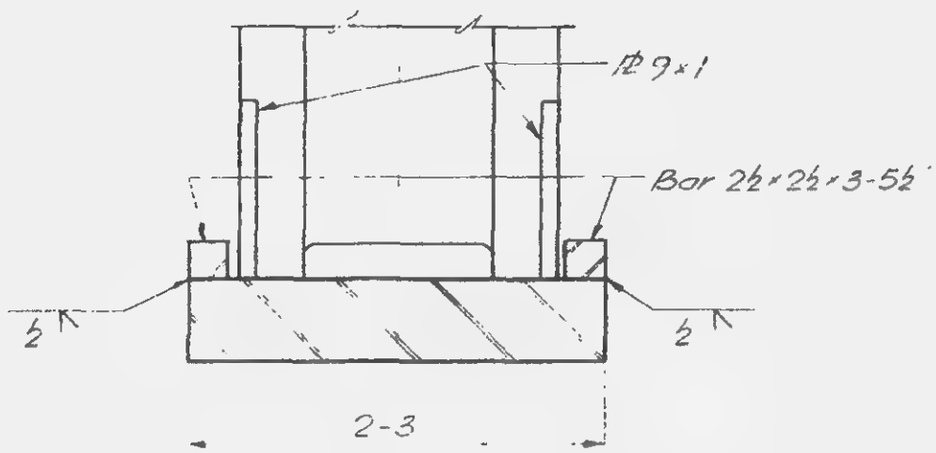

Section p-p

LICENSED PROFESSIONAL ENGINEER
LESLIE E. ROBERTSON
No. 34360
STATE OF NEW YORK

11-JK2-26

SKILLING - HELLE - CHRISTIANSEN - ROBERTSON Structural & Civil Engineers

PROJECT THE WORLD TRADE CENTER | TITLE TRUSS DETAIL 20 | DATE 5-15-67

REVISIONS

Y-1-68

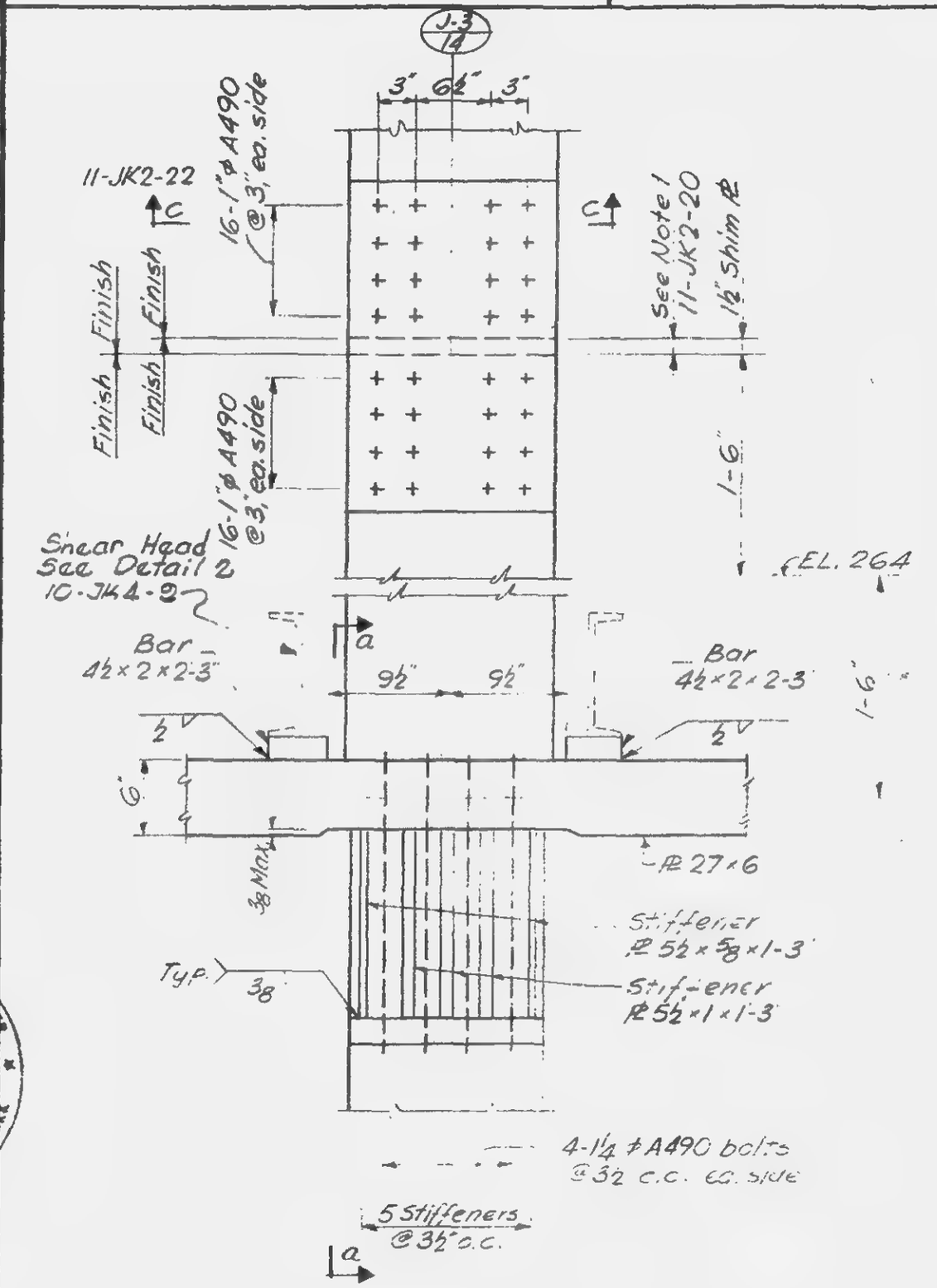

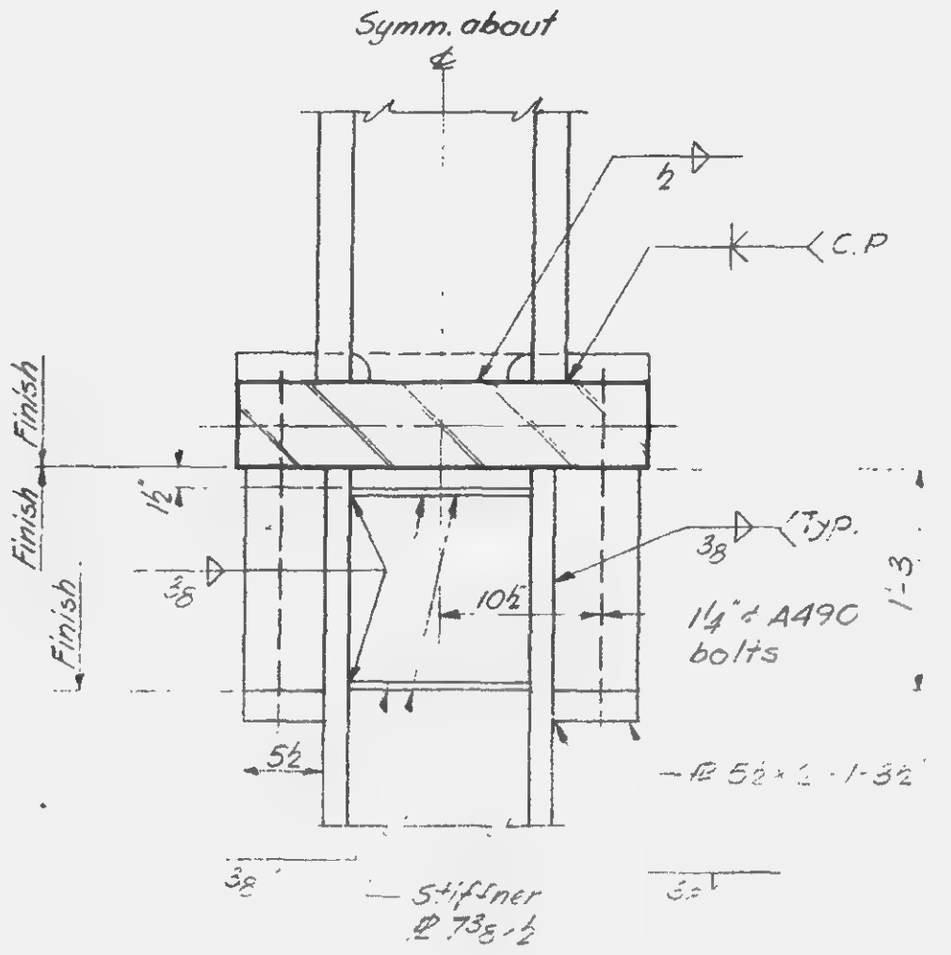

SECTION a-a

LICENSED PROFESSIONAL ENGINEER
LESLIE E. ROBERTSON
No. 34360
UNIVERSITY OF THE STATE OF NEW YORK

11-JK2-27

SKILLING - HELLE - CHRISTIANSEN - ROBERTSON Structural & Civil Engineers

PROJECT THE WORLD TRADE CENTER | TITLE TRUSS DETAIL 21 | DATE 5-15-67

REVISIONS

J-1-68

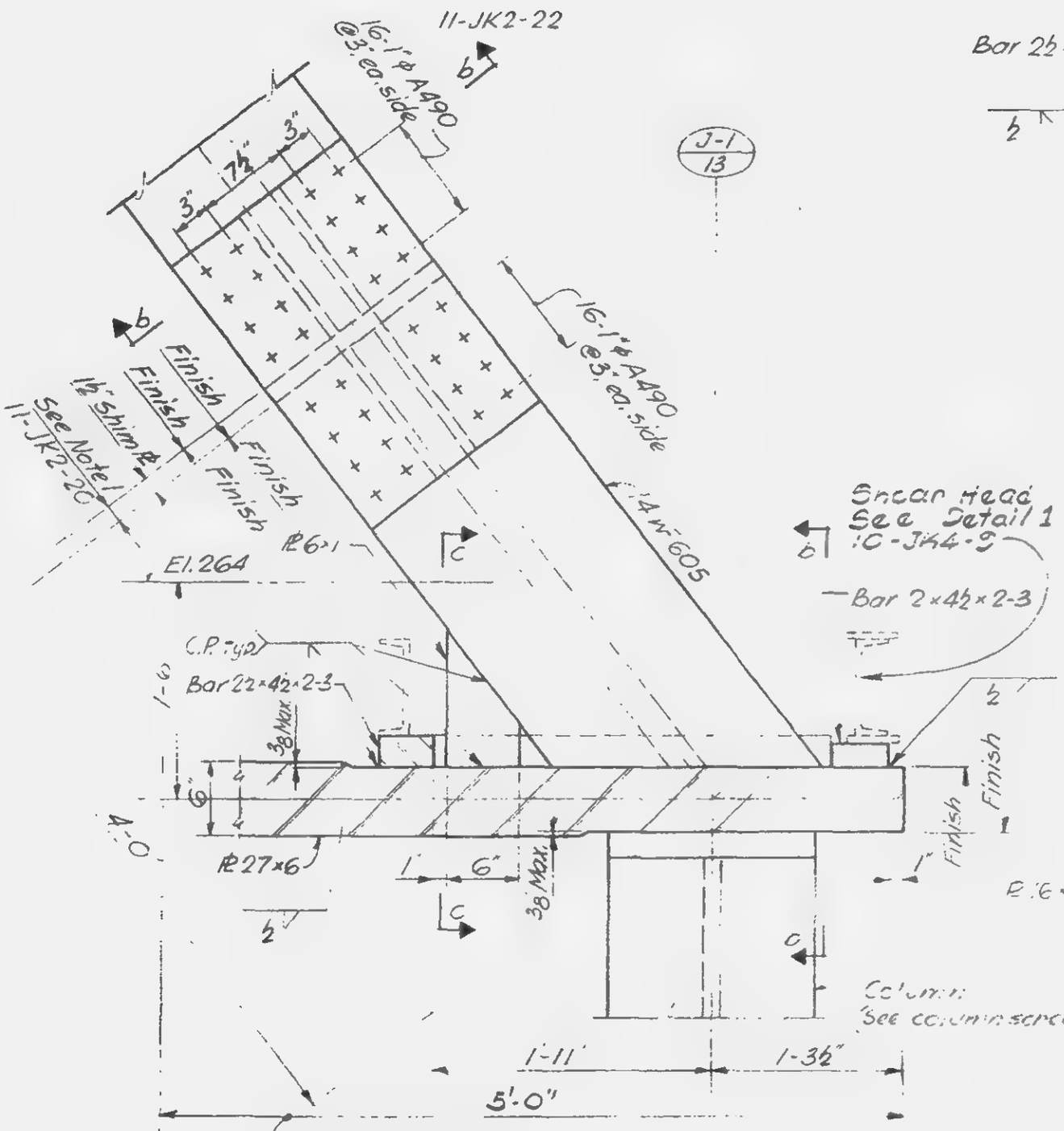

Elevation b-b

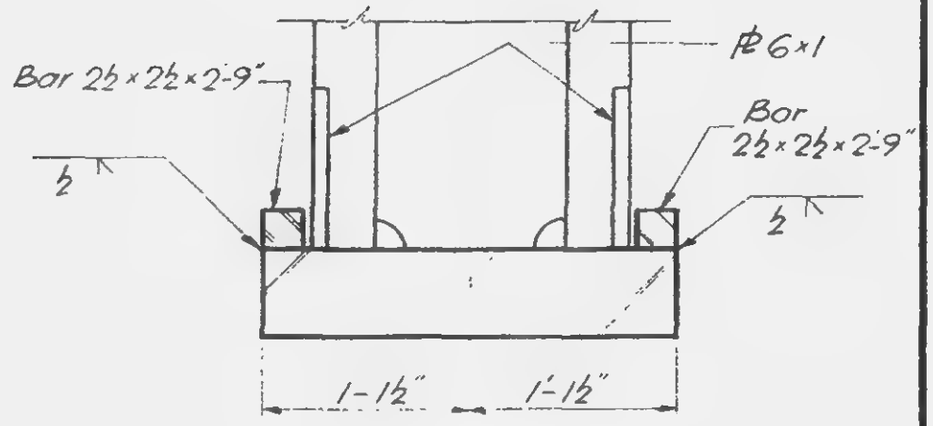

Section c-c

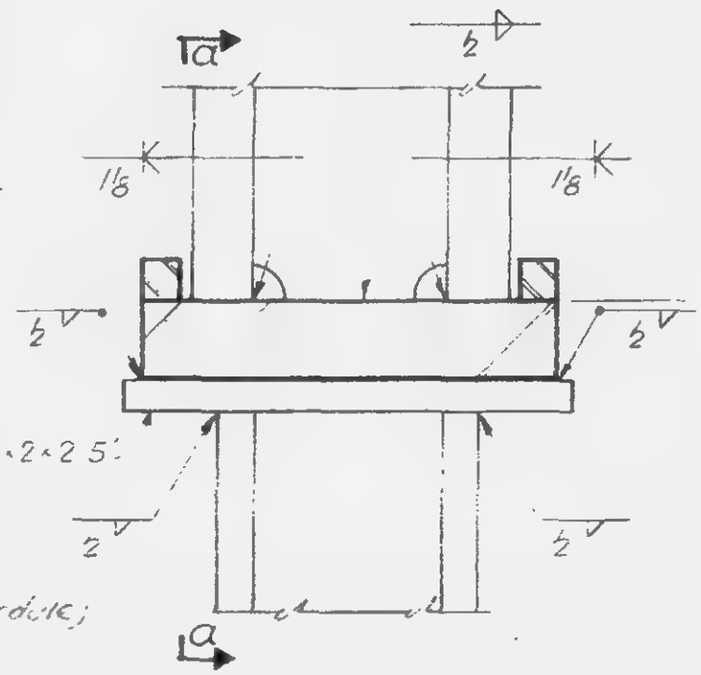

Section b-b

LICENSED PROFESSIONAL ENGINEER LESLIE E. ROBERTSON No. 34360 UNIVERSITY OF THE STATE OF NEW YORK

11-JK2-28

SKILLING - HELLE - CHRISTIANSEN - ROBERTSON Structural & Civil Engineers

PROJECT THE WORLD TRADE CENTER | TITLE TRUSS DETAIL 22 | DATE 5-15-67

REVISIONS

5-1-68

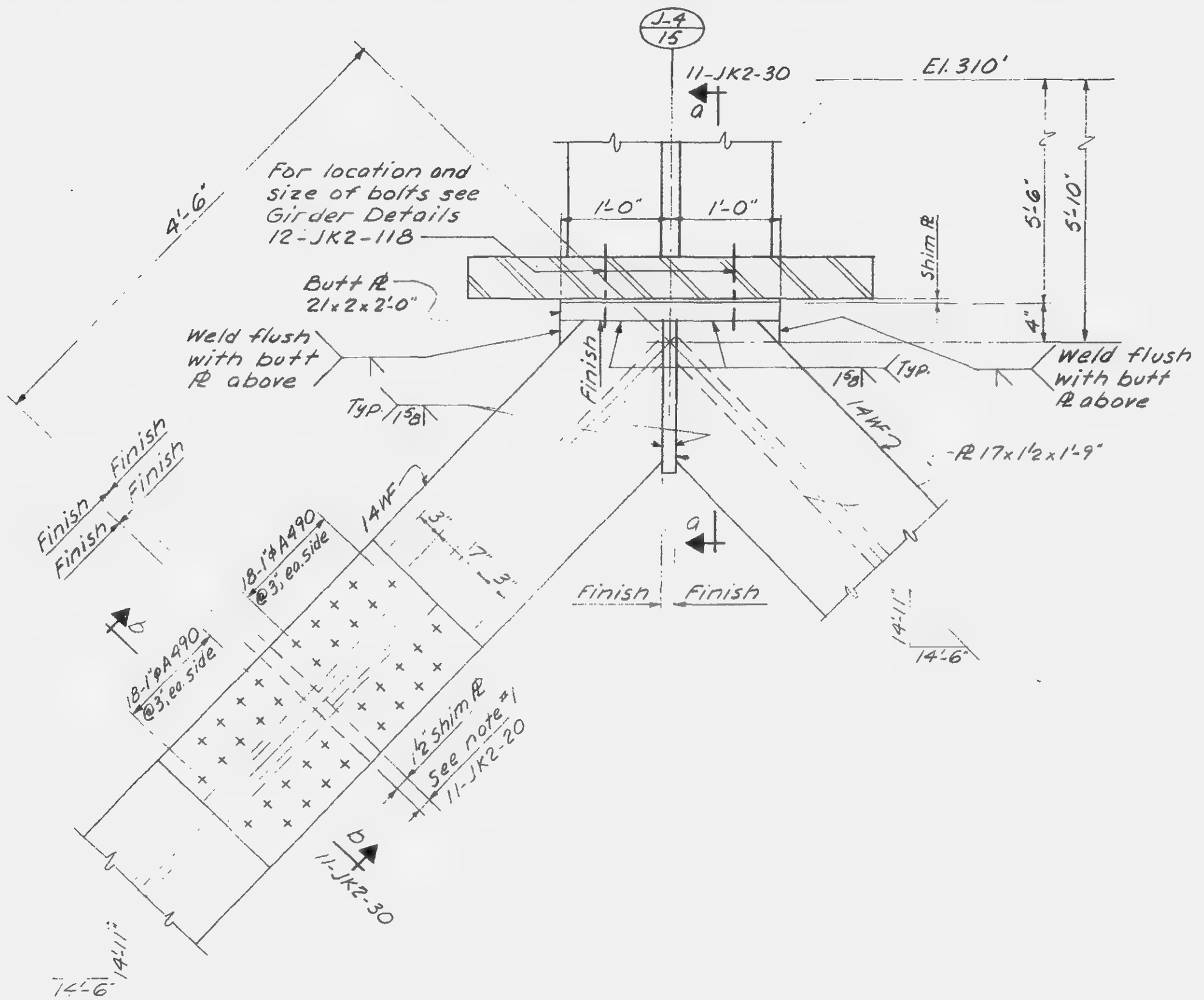

LICENSED PROFESSIONAL ENGINEER LESLIE E. ROBERTSON No. 34360 UNIVERSITY OF THE STATE OF NEW YORK

11-JK2-29

SKILLING - HELLE - CHRISTIANSEN - ROBERTSON Structural & Civil Engineers

PROJECT THE WORLD TRADE CENTER | TITLE TRUSS DETAILS | DATE 5-16-67

REVISIONS

5-1-68

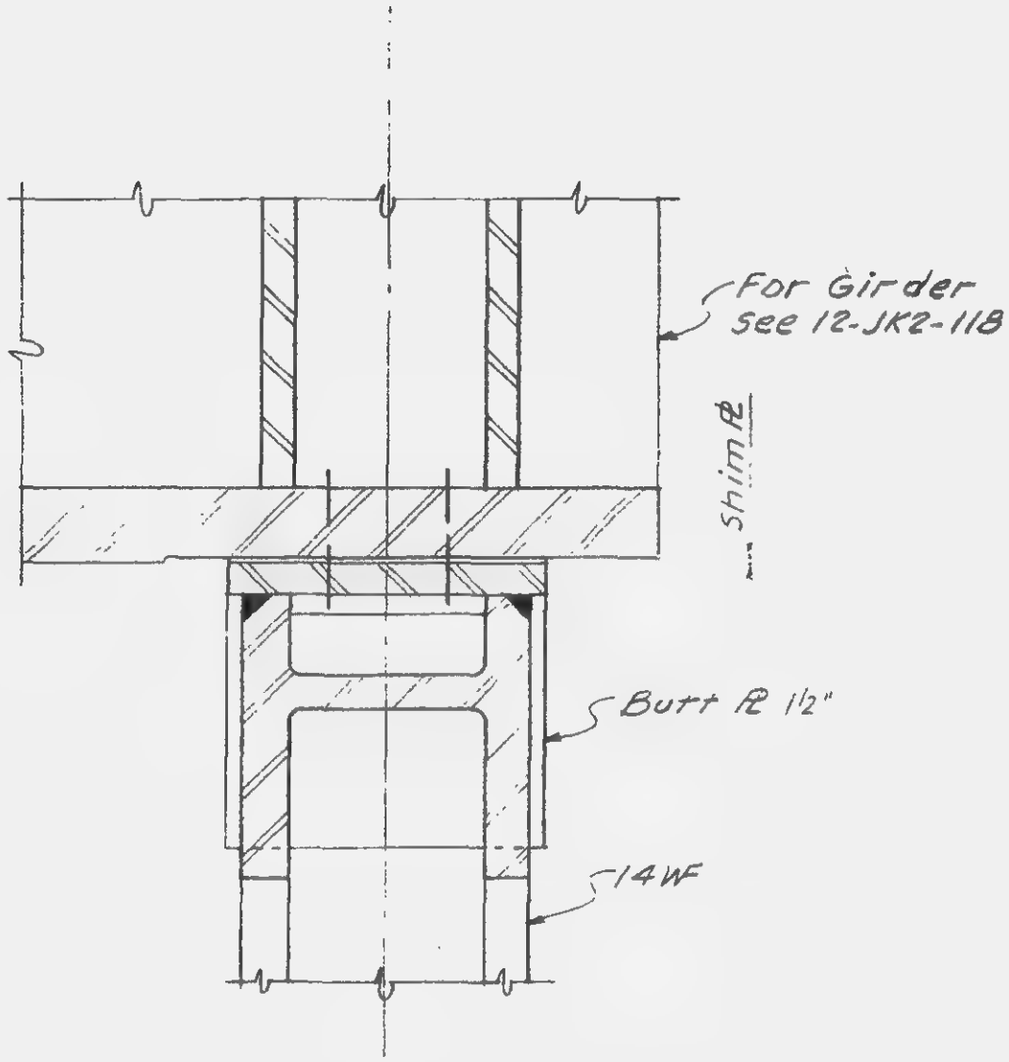

Section a-a

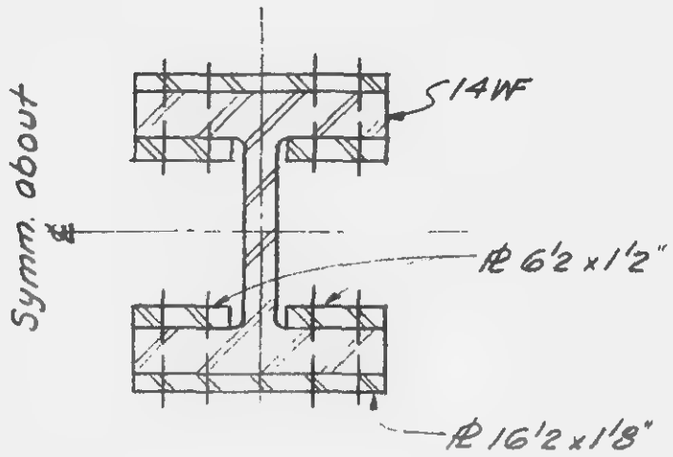

Section b-b

Note:
Bolt holes thru 14WF may be ⅛" larger than nominal bolt size.

LICENSED PROFESSI... LESLIE E. RO... No. ... UNIVERSITY OF ... YORK

11-JK2-30

SKILLING - HELLE - CHRISTIANSEN - ROBERTSON Structural & Civil Engineers

PROJECT THE WORLD TRADE CENTER | TITLE TRUSS DETAIL 23 | DATE 5-15-67

REVISIONS

5-1-68

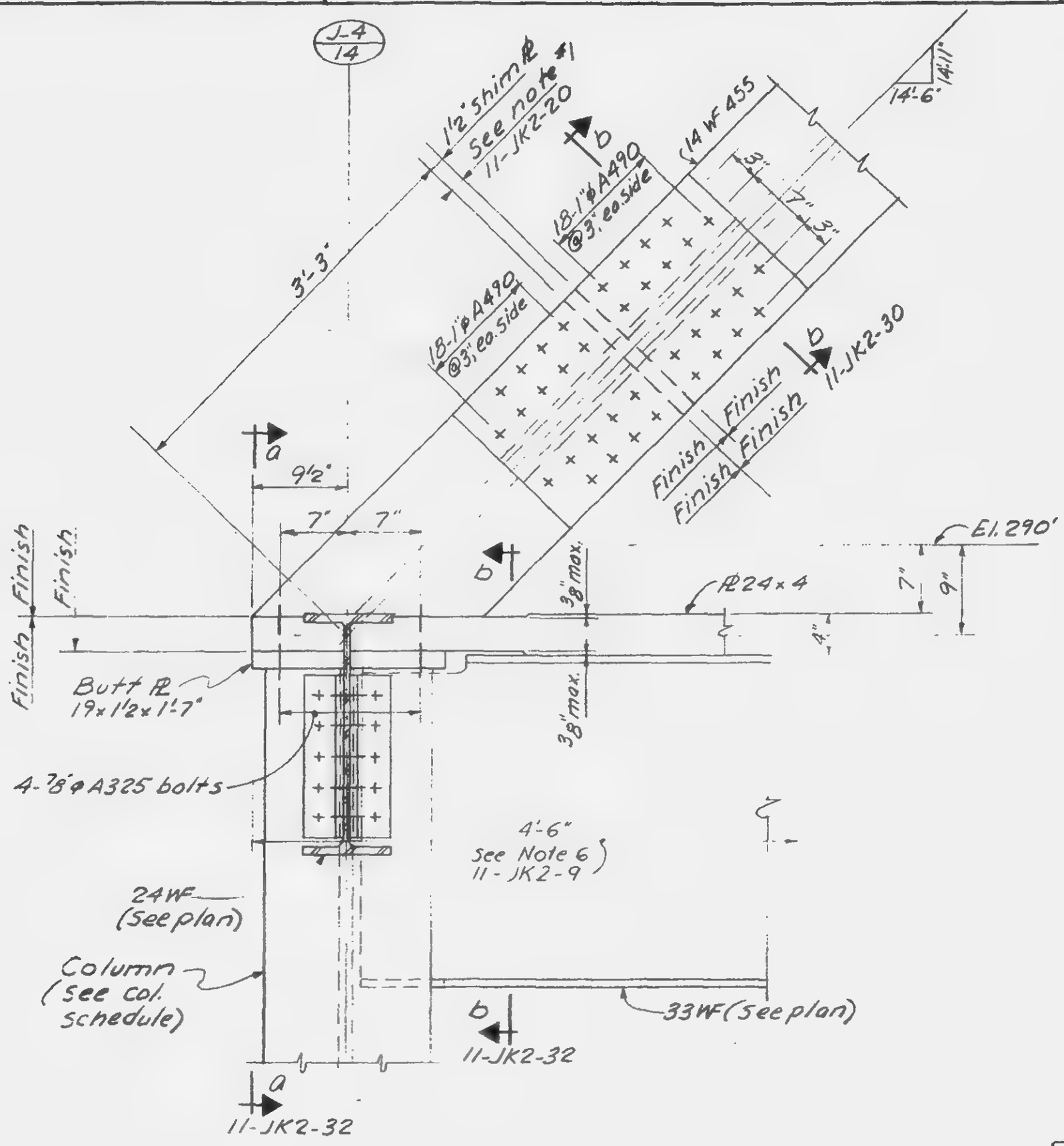

LICENSED PROFESSIONAL ENGINEER LESLIE E. ROBERTSON No. 34310 STATE OF NEW YORK

11-JK2-31

SKILLING - HELLE - CHRISTIANSEN - ROBERTSON Structural & Civil Engineers

PROJECT THE WORLD TRADE CENTER | TITLE TRUSS DETAILS | DATE 5-15-67

REVISIONS

5-1-68

J-4 / 14

Symm about ℄

14WF455

½ At web of 14WF

1 3/8

1 3/8

El. 290'

7'

2-LS 4x3½x7/16x1'-2½"

5-1"ϕA325 bolts @3" ea. leg

Typ. 3/8

3½ 3½

7/8"ϕ bolts

5-1"ϕA325 bolts @3" ea. leg

Finish

24WF (See plan)

Column (See col. Sch.)

24WF (See plan)

2 Ls 4x3½x7/16x1'-2½'

Section a-a

8-7/8"ϕA325 bolts @3" o.c. ea. leg

2 Ls 4x3½x3/8x1'-11½"

33WF

Section b-b

LICENSED PROFESSIONAL ENGINEER LESLIE E. ROBERTSON No. 34[illegible] STATE OF NEW YORK

11-JK2-32

SKILLING - HELLE - CHRISTIANSEN - ROBERTSON Structural & Civil Engineers

PROJECT THE WORLD TRADE CENTER | TITLE TRUSS DETAIL 24 | DATE 5-15-67

REVISIONS

5-1-68

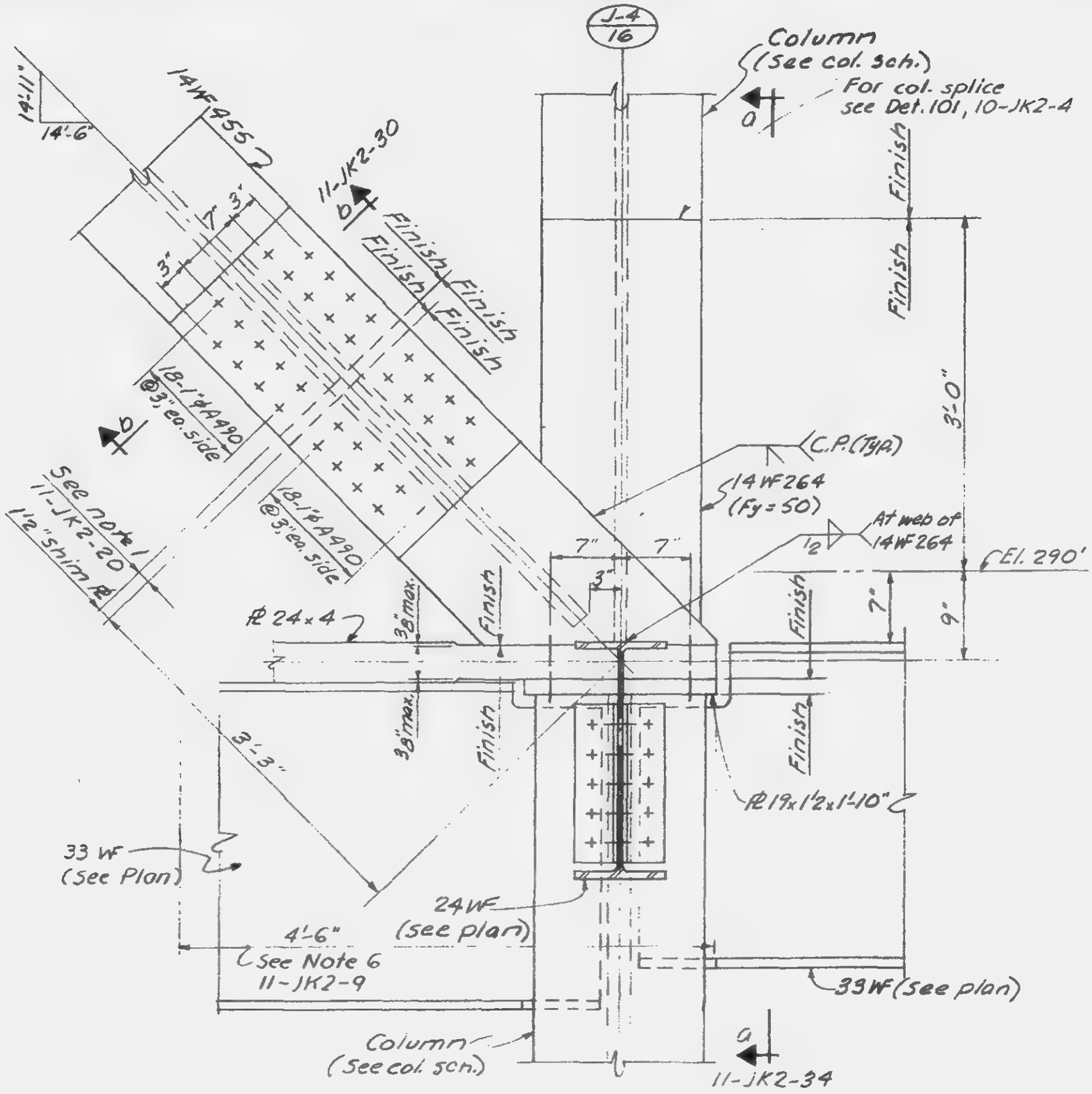

LICENSED PROFESSIONAL ENGINEER LESLIE E. ROBERTSON No. 34360 STATE OF NEW YORK

11-JK2-33

SKILLING - HELLE - CHRISTIANSEN - ROBERTSON Structural & Civil Engineers

PROJECT THE WORLD TRADE CENTER | TITLE TRUSS DETAILS | DATE 5-15-67

REVISIONS

5-1-68

J-4 / 16

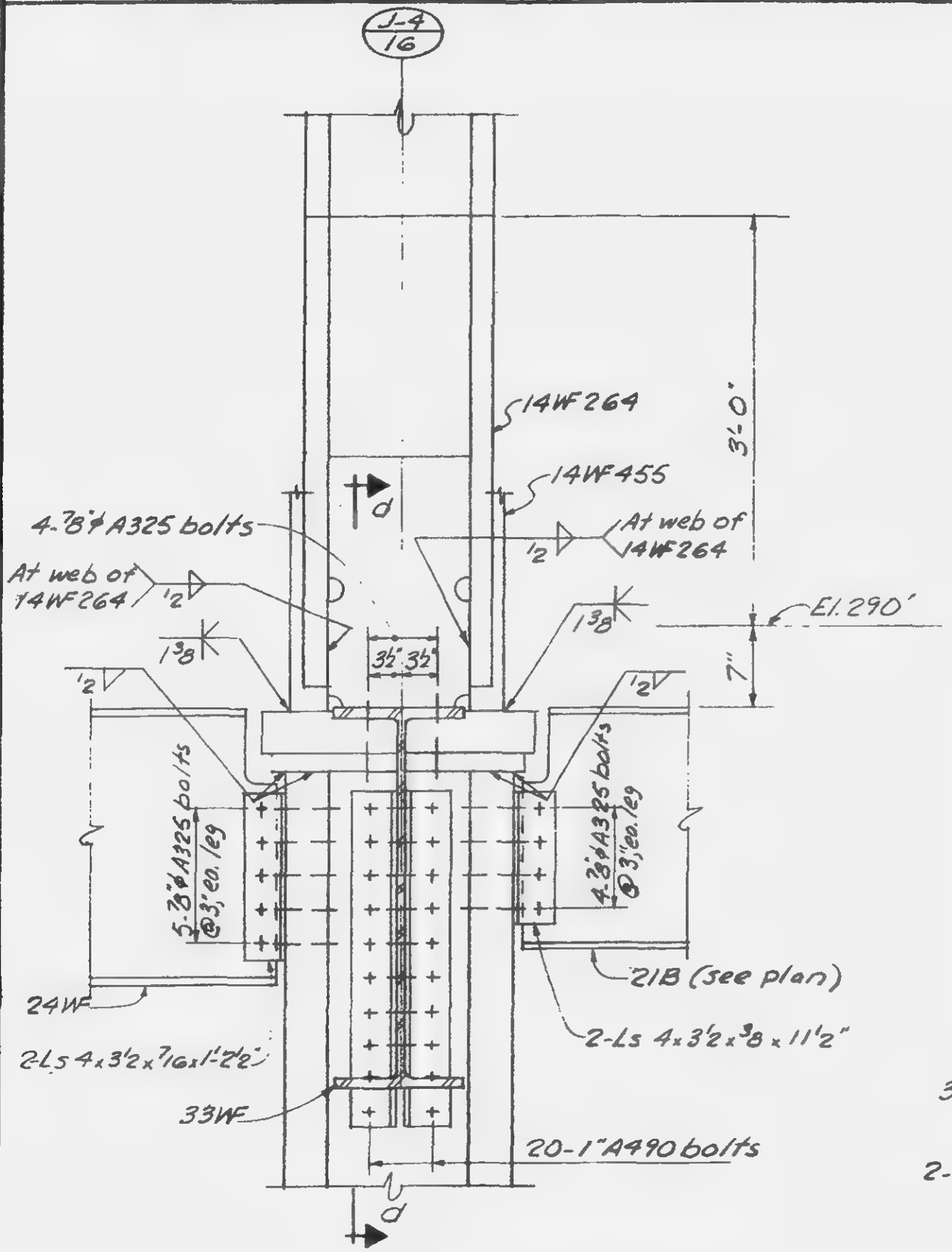

Section a-a

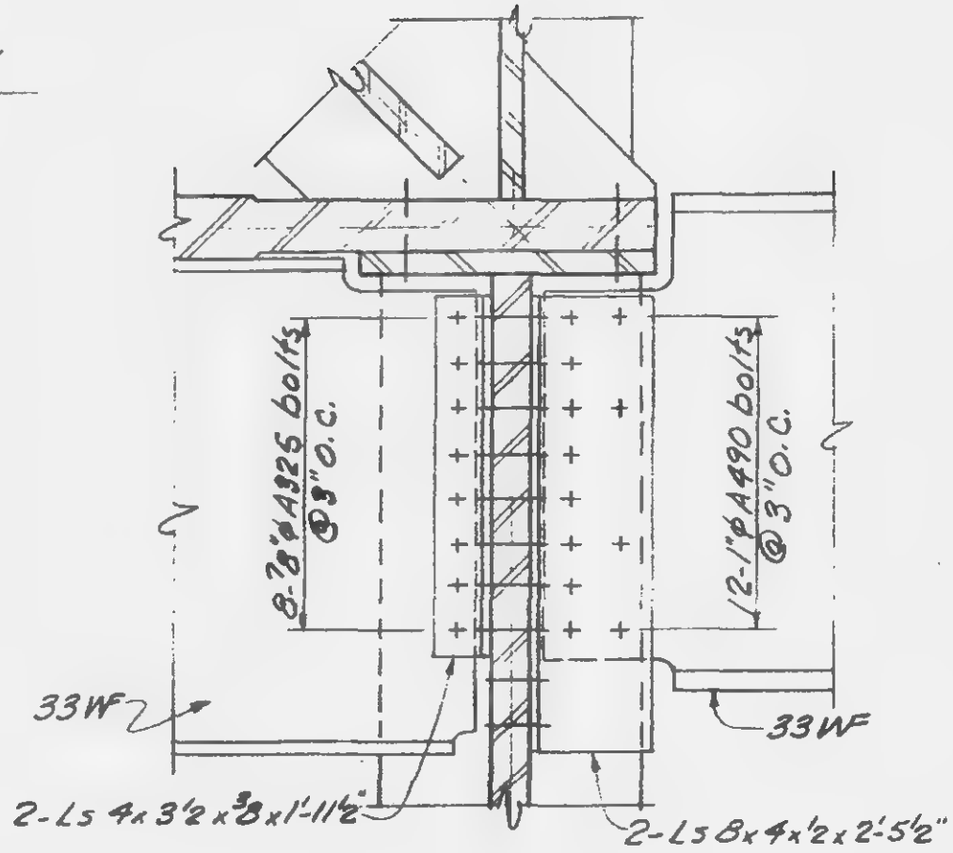

Section d-d

LICENSED PROFESSIONAL ENGINEER
LESLIE E. ROBERTSON
No. 54360
STATE OF NEW YORK

11-JK2-34

SKILLING - HELLE - CHRISTIANSEN - ROBERTSON Structural & Civil Engineers

PROJECT THE WORLD TRADE CENTER

TITLE TRUSS DETAIL '25

DATE 5-16-67

REVISIONS

5-1-68

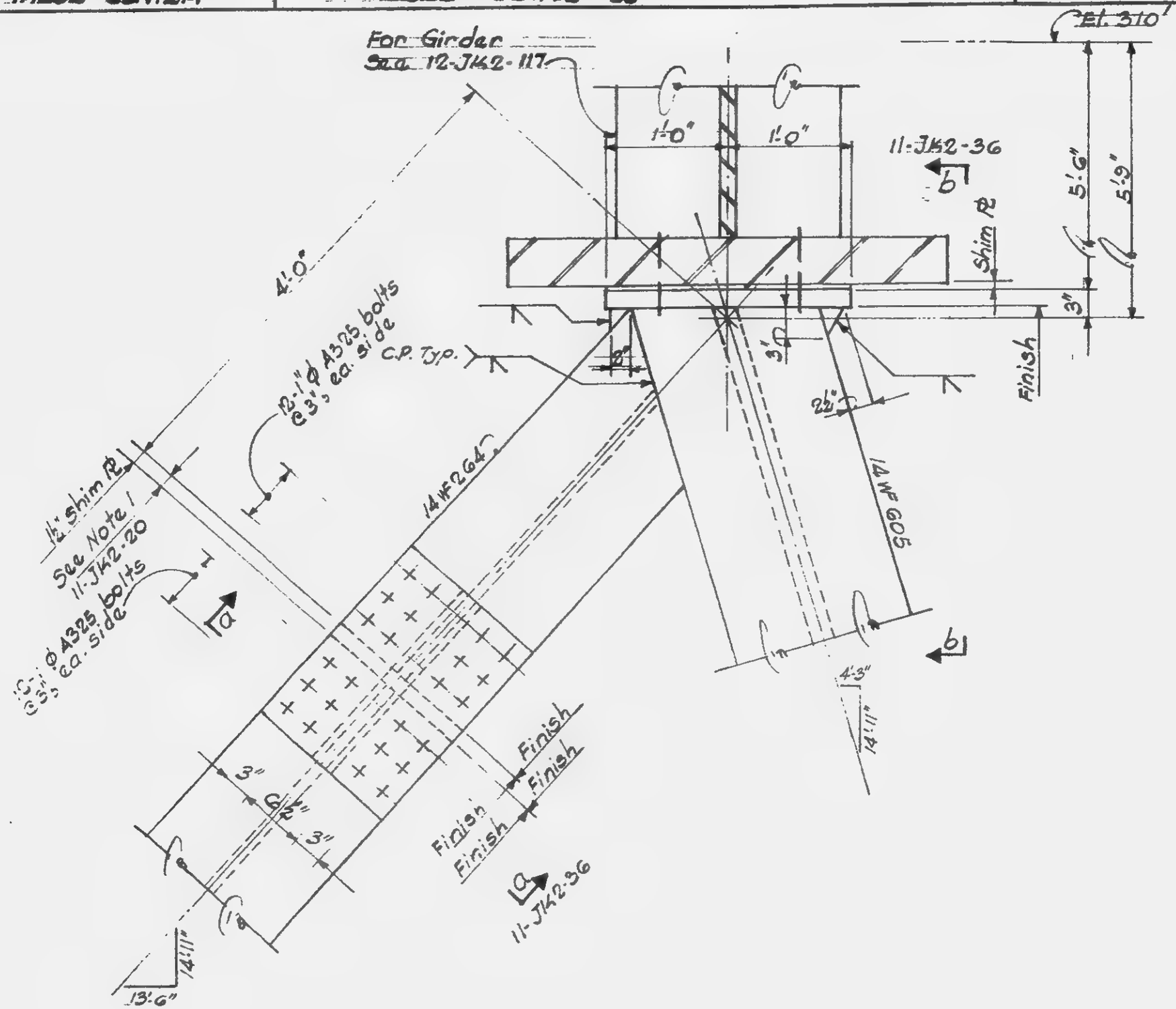

LICENSED PROFESSIONAL ENGINEER
LESLIE E. ROBERTSON
No. 84360
UNIVERSITY OF THE STATE OF NEW YORK

11-JK2-35

SKILLING - HELLE - CHRISTIANSEN - ROBERTSON Structural & Civil Engineers

PROJECT THE WORLD TRADE CENTER | TITLE TRUSS DETAIL | DATE 5-1-68

REVISIONS

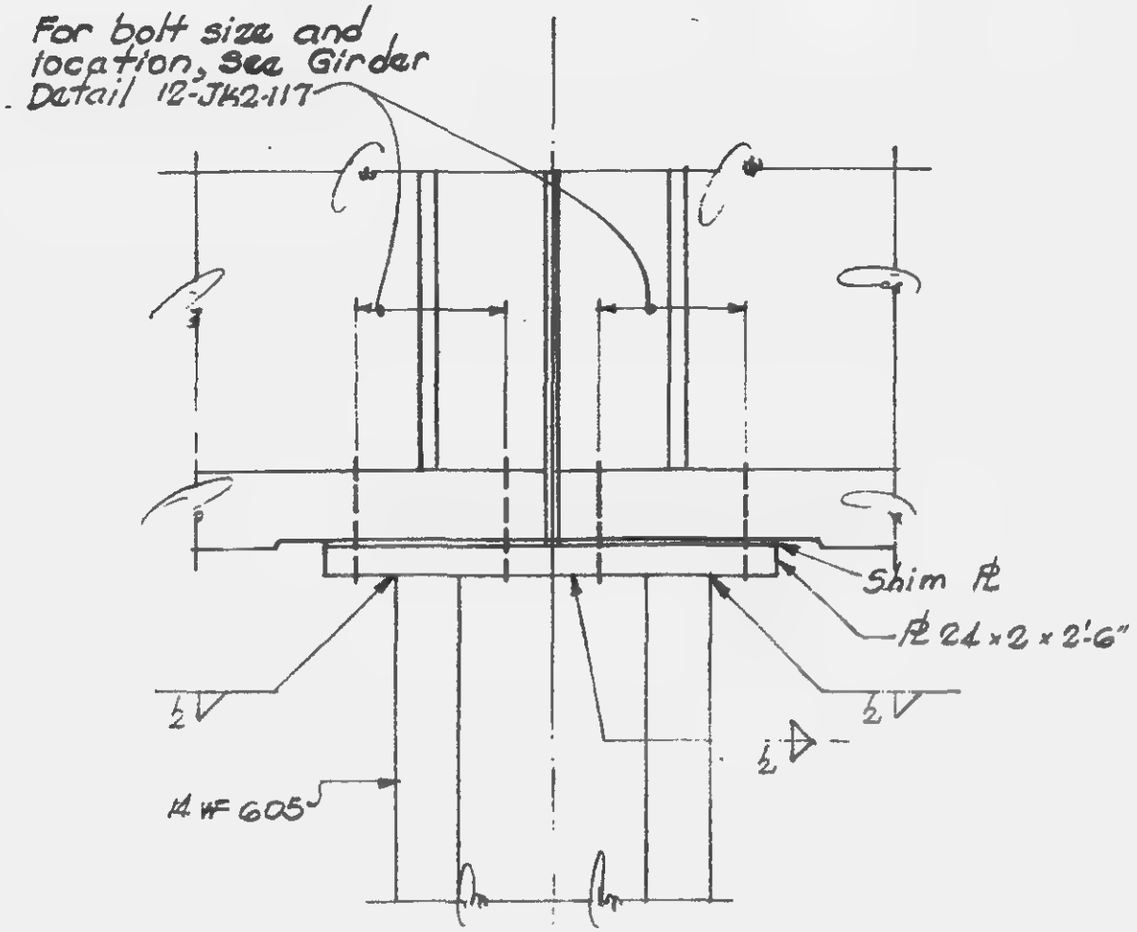

Section b-b

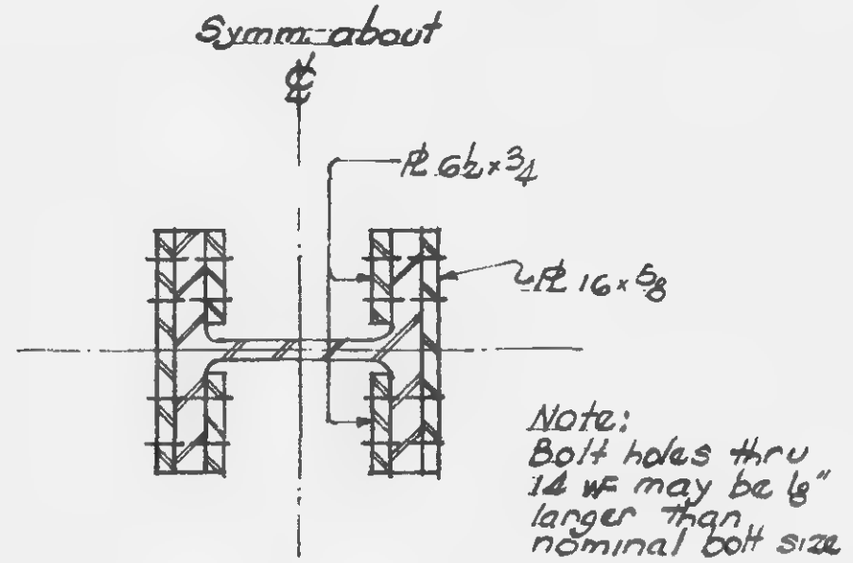

Section a-a

LICENSED PROFESSIONAL ENGINEER LESLIE E. ROBERTSON No. 34360 STATE OF NEW YORK

11-JK2-36

SKILLING - HELLE - CHRISTIANSEN - ROBERTSON Structural & Civil Engineers

PROJECT THE WORLD TRADE CENTER | TITLE TRUSS DETAIL 26 | DATE 5-1-68

REVISIONS

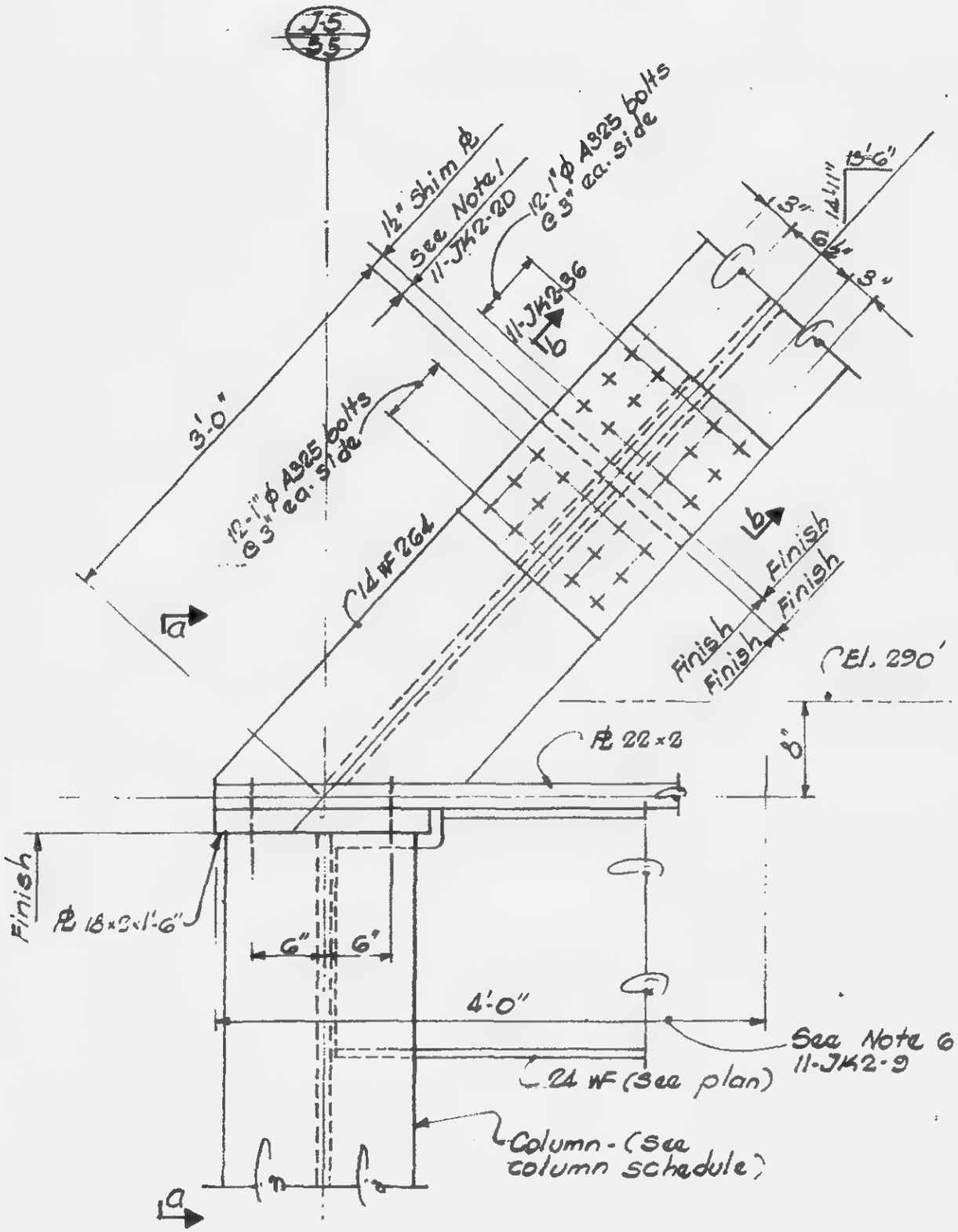

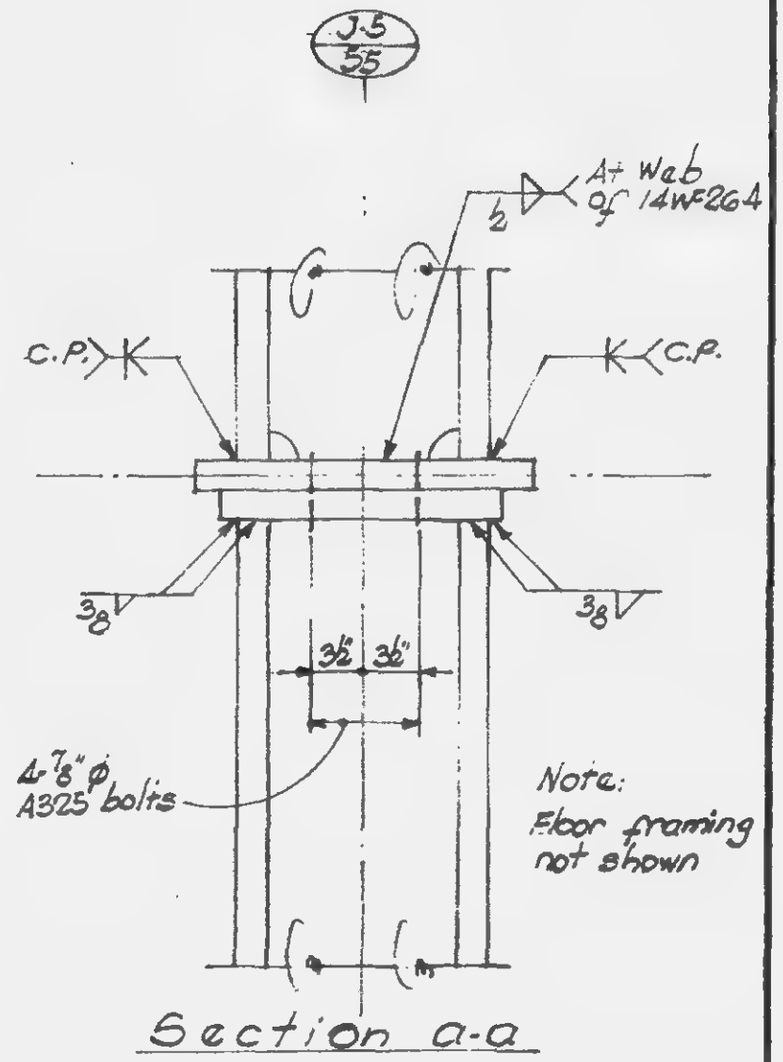

Section a-a

LICENSED PROFESSIONAL ENGINEER
LESLIE E. ROBERTSON
No. 34360
UNIVERSITY OF THE STATE OF NEW YORK

11-JK2-37

SKILLING - HELLE - CHRISTIANSEN - ROBERTSON — Structural & Civil Engineers

PROJECT THE MOBILE HOME CENTER | TITLE TP488 DETAIL 27 | DATE 5-1-68

REVISIONS

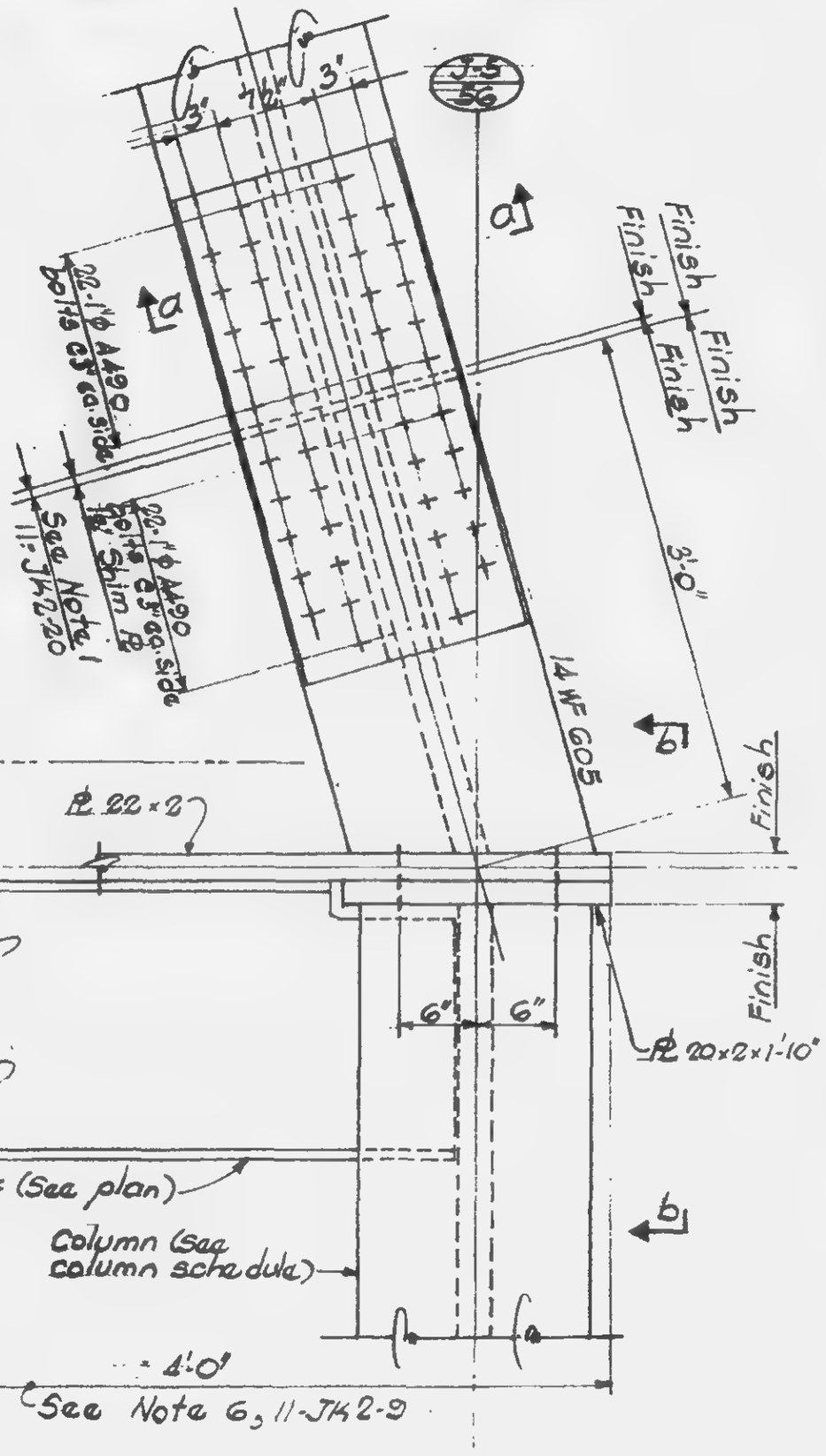

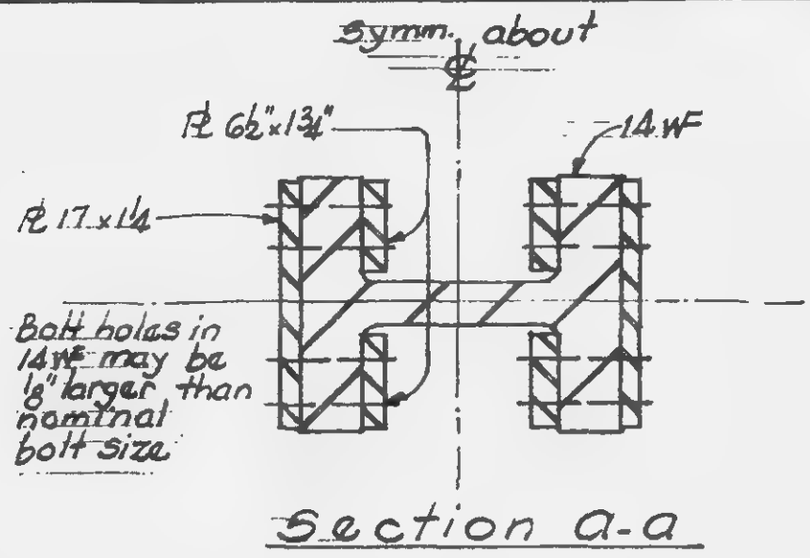

Section a-a

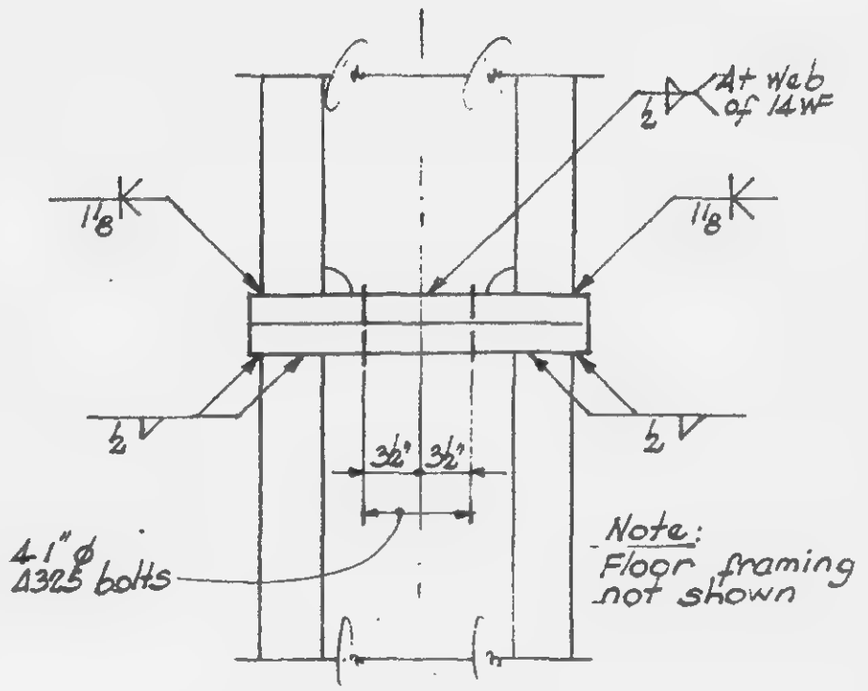

Section b-b

LICENSED PROFESSIONAL ENGINEER LESLIE E. ROBERTSON No. 8436 UNIVERSITY OF THE STATE OF NEW MEXICO

11-JK2-38

SKILLING - HELLE - CHRISTIANSEN - ROBERTSON Structural & Civil Engineers

PROJECT THE WORLD TRADE CENTER | TITLE TRUSS DETAIL 28 | DATE 5-1-68

REVISIONS

Column (See column schedule

JG / 12

For Column splice see Detail 6, 10-JK2-36

a

14 WF 342 (Fy=50)

3'-0"

El. 271

2'-0"

10"

3/8" max.

1'-3½"

Finish

Finish

6"

PL 30x6

3"

1'-6"

See Note 6 11-JK2-9

14 WF 665

7'-0"

9'-3½"

C.P.

14 WF 53

3'-0"

6-1" ϕ A490 @3" ea. side

6-1" ϕ A490 @3" ea. side

Column (See column schedule)

52"

a

For shear head see 10-JK4-8

½

Typ.

½

½

Typ.

C.P.

C.P.

At web of 14WF53

½

Splice PL 8"x⅞"

Section a-a

11-JK2-39

LICENSED PROFESSIONAL ENGINEER LESLIE E. ROBERTSON No. 84360 UNIVERSITY OF THE STATE OF NEW YORK

SKILLING - HELLE - CHRISTIANSEN - ROBERTSON Structural & Civil Engineers

PROJECT THE WORLD TRADE CENTER | TITLE TRUSS DETAIL 29 | DATE 5-1-68

REVISIONS

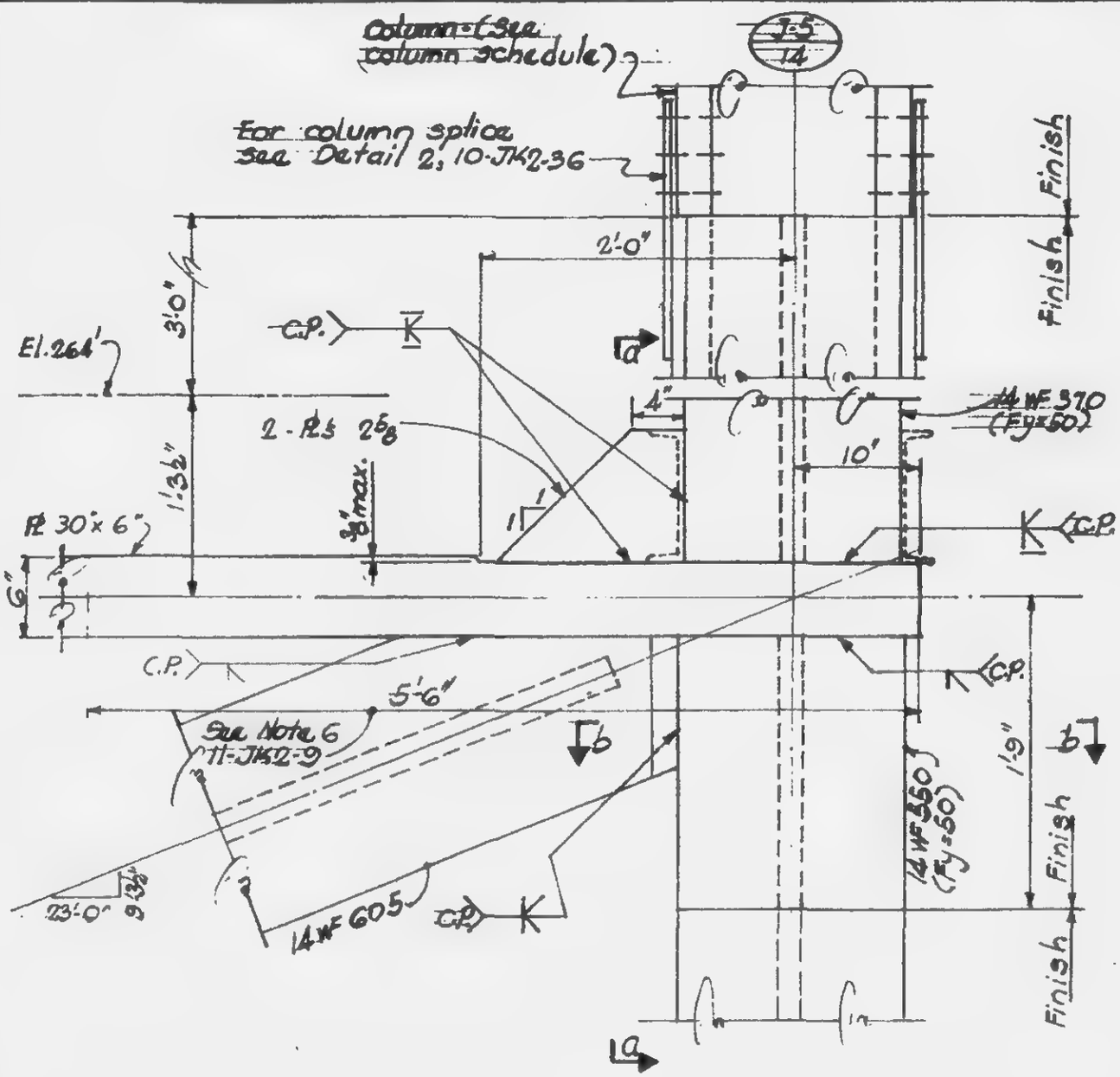

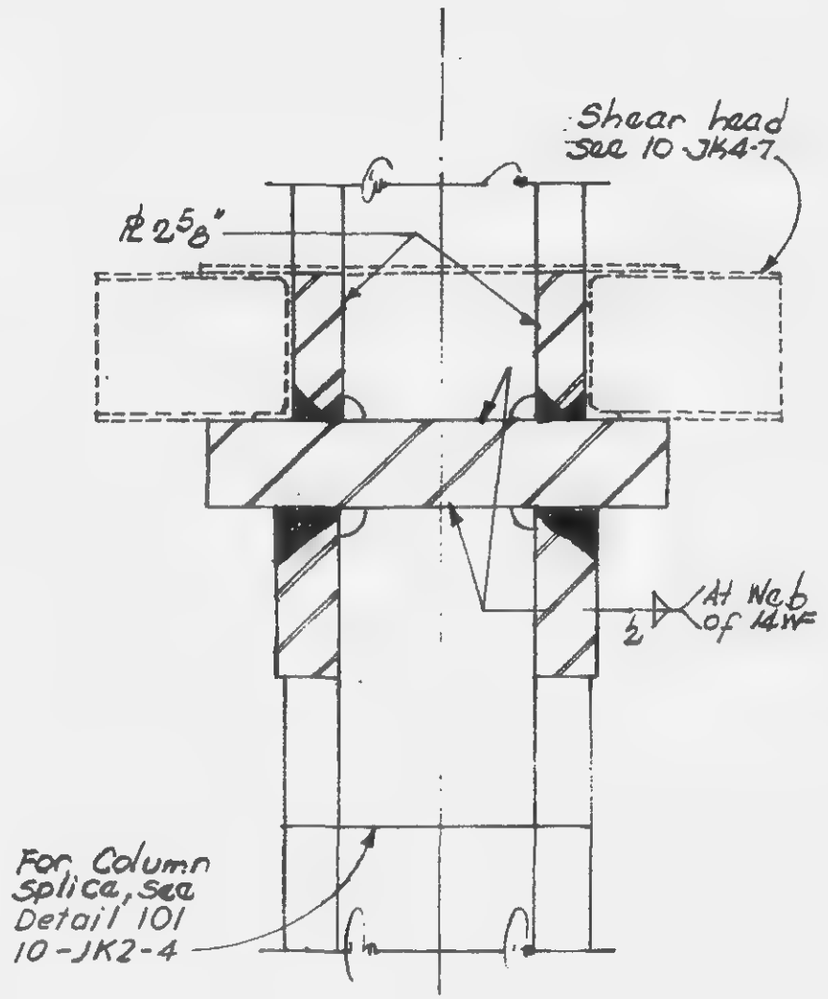

Section a-a

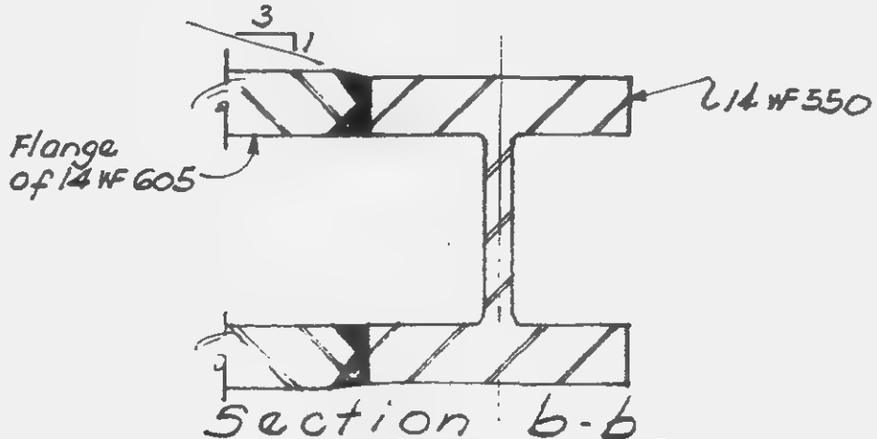

Section b-b

LICENSED PROFESSIONAL ENGINEER
LESLIE E. ROBERTSON
No. 34360
UNIVERSITY OF THE STATE OF NEW YORK

11-JK2-40

SKILLING - HELLE - CHRISTIANSEN - ROBERTSON Structural & Civil Engineers

PROJECT THE WORLD TRADE CENTER | TITLE TRUSS DETAIL 30 | DATE 5-1-68

REVISIONS

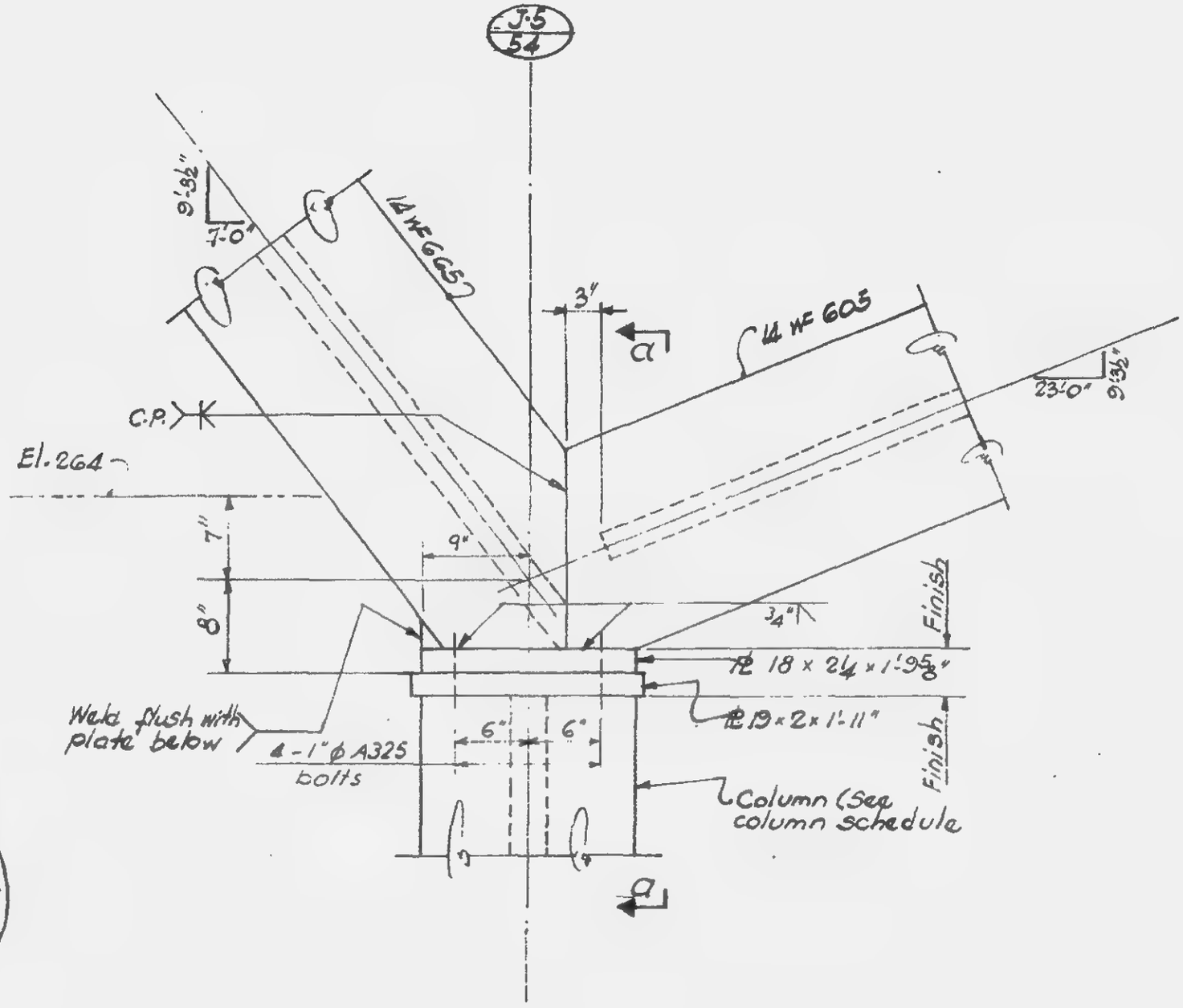

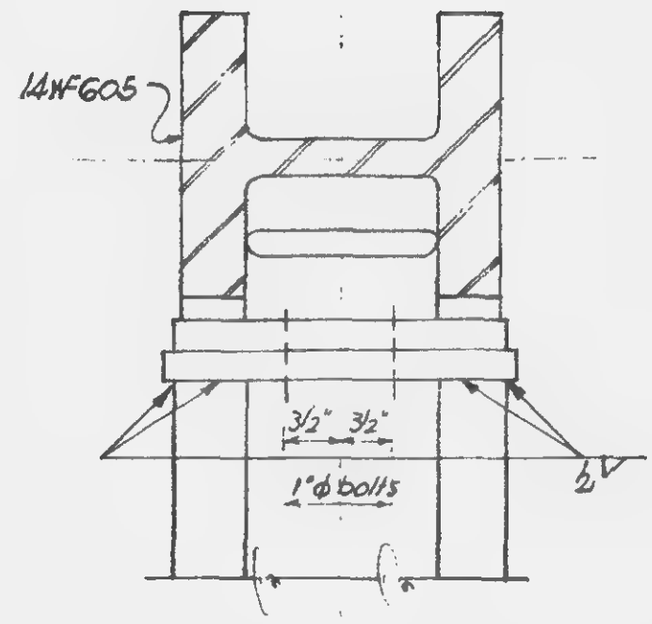

Section a-a

LICENSED PROFESSIONAL ENGINEER
LESLIE E. ROBERTSON
No. 34360
STATE OF NEW YORK

11-JK2-4i

SKILLING - HELLE - CHRISTIANSEN - ROBERTSON — Structural & Civil Engineers

PROJECT THE WORLD TRADE CENTER | TITLE TRUSS DETAIL 31 | DATE 5-1-68

REVISIONS

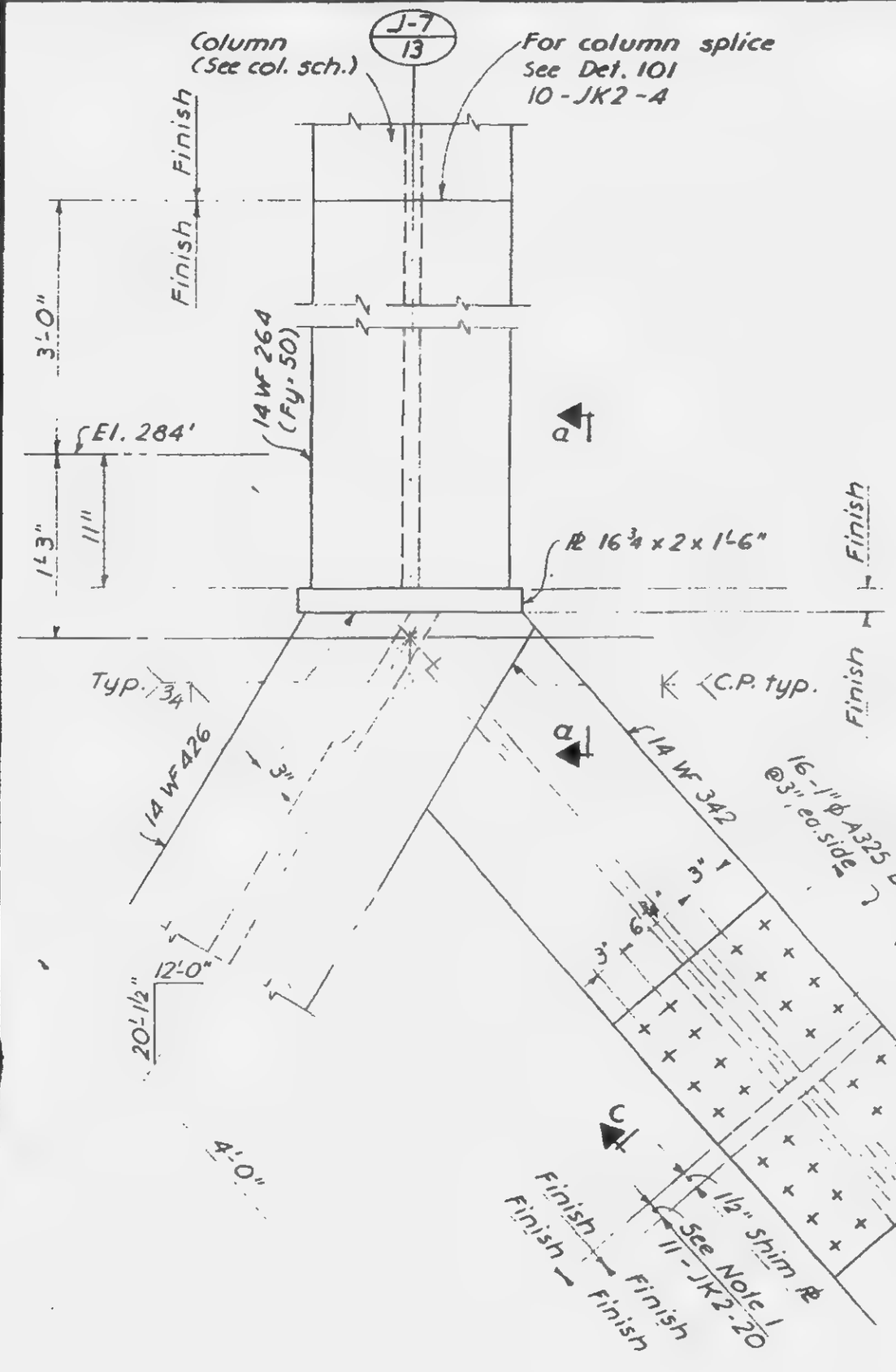

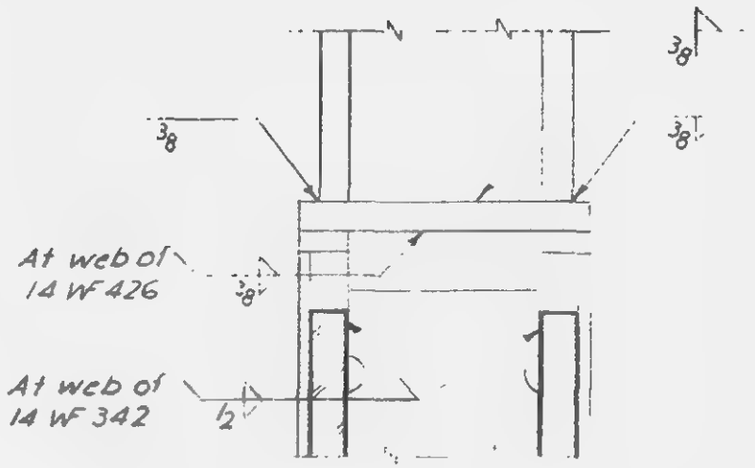

Section a-a

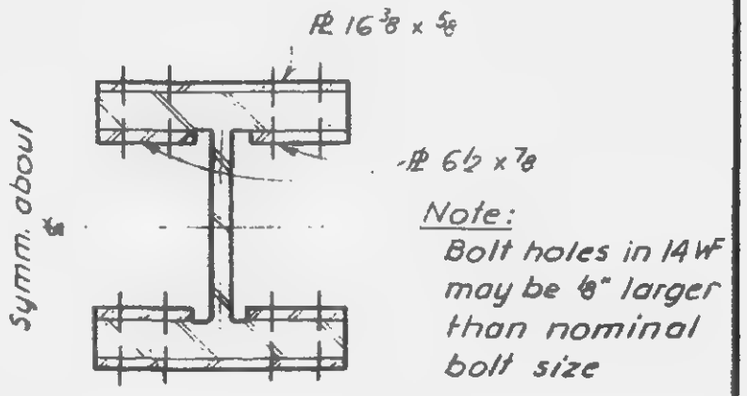

Note:
Bolt holes in 14 WF may be ⅛" larger than nominal bolt size

Section c-c

LICENSED PROFESSIONAL ENGINEER
LESLIE E. ROBERTSON
No. 54360
STATE OF NEW YORK

11 - JK2 - 42

SKILLING - HELLE - CHRISTIANSEN - ROBERTSON Structural & Civil Engineers

PROJECT THE WORLD TRADE CENTER | TITLE TRUSS DETAIL 32 | DATE 5-1-68

REVISIONS

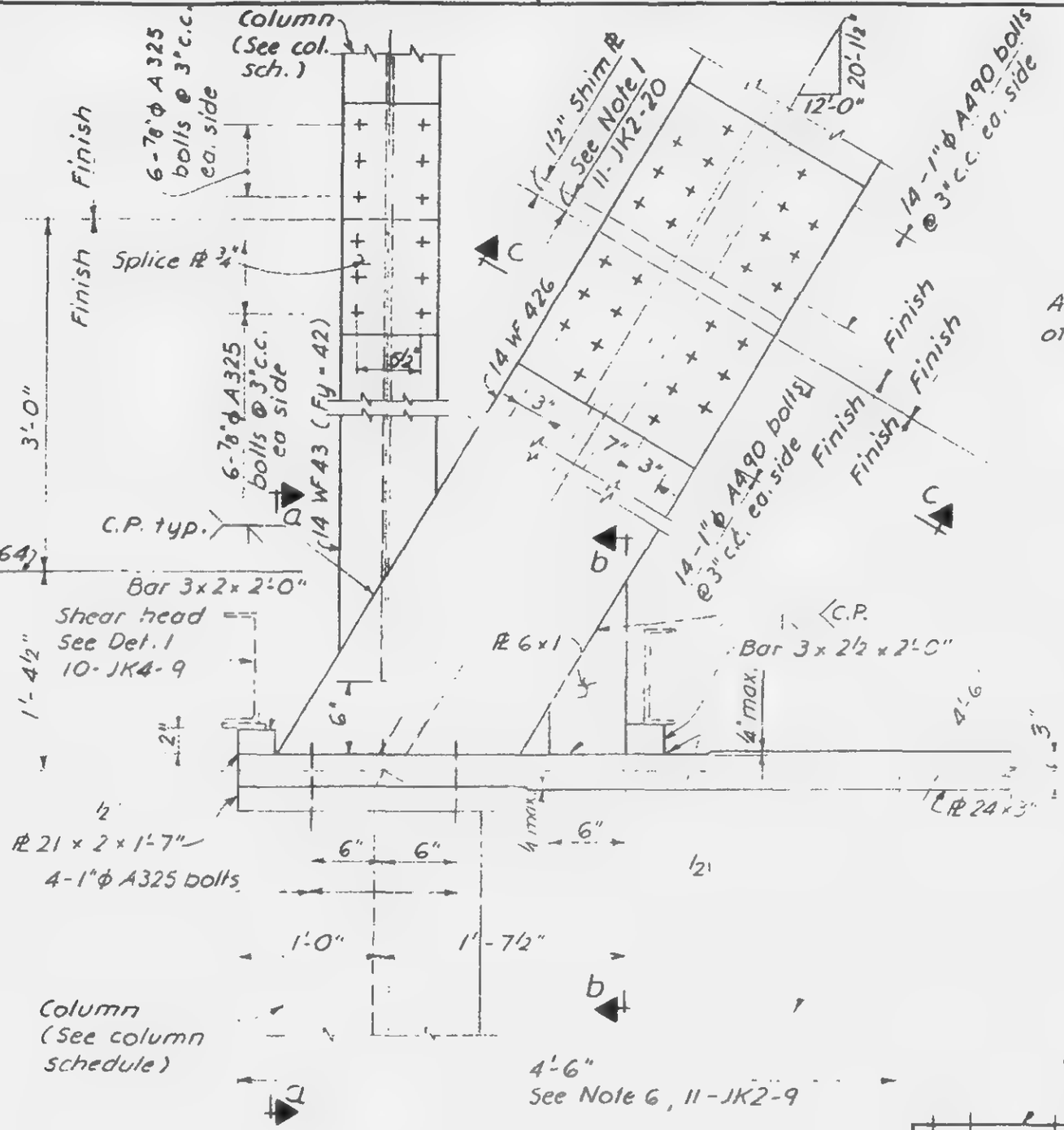

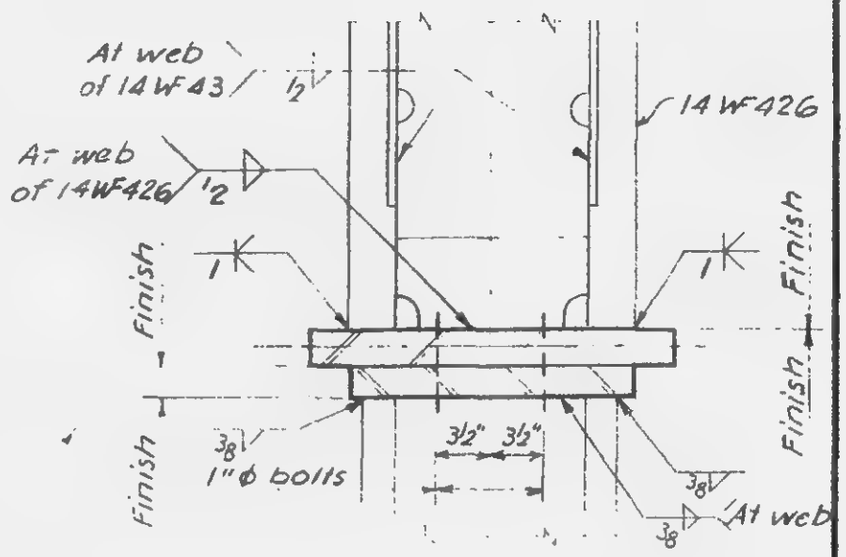

Section a-a

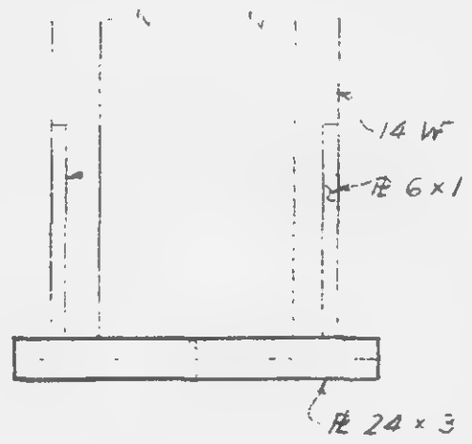

Section b-b

Section c-c

Note:
Bolt holes in 14 WF may be 1/8" larger than nominal bolt size.

11-JK2-43

LICENSED PROFESSIONAL ENGINEER
LESLIE E. ROBERTSON
No. 54360
LICENSED IN THE STATE OF NEW YORK

SKILLING - HELLE - CHRISTIANSEN - ROBERTSON Structural & Civil Engineers

PROJECT THE WORLD TRADE CENTER | TITLE TRUSS DETAIL 33 | DATE 5-1-68

REVISIONS

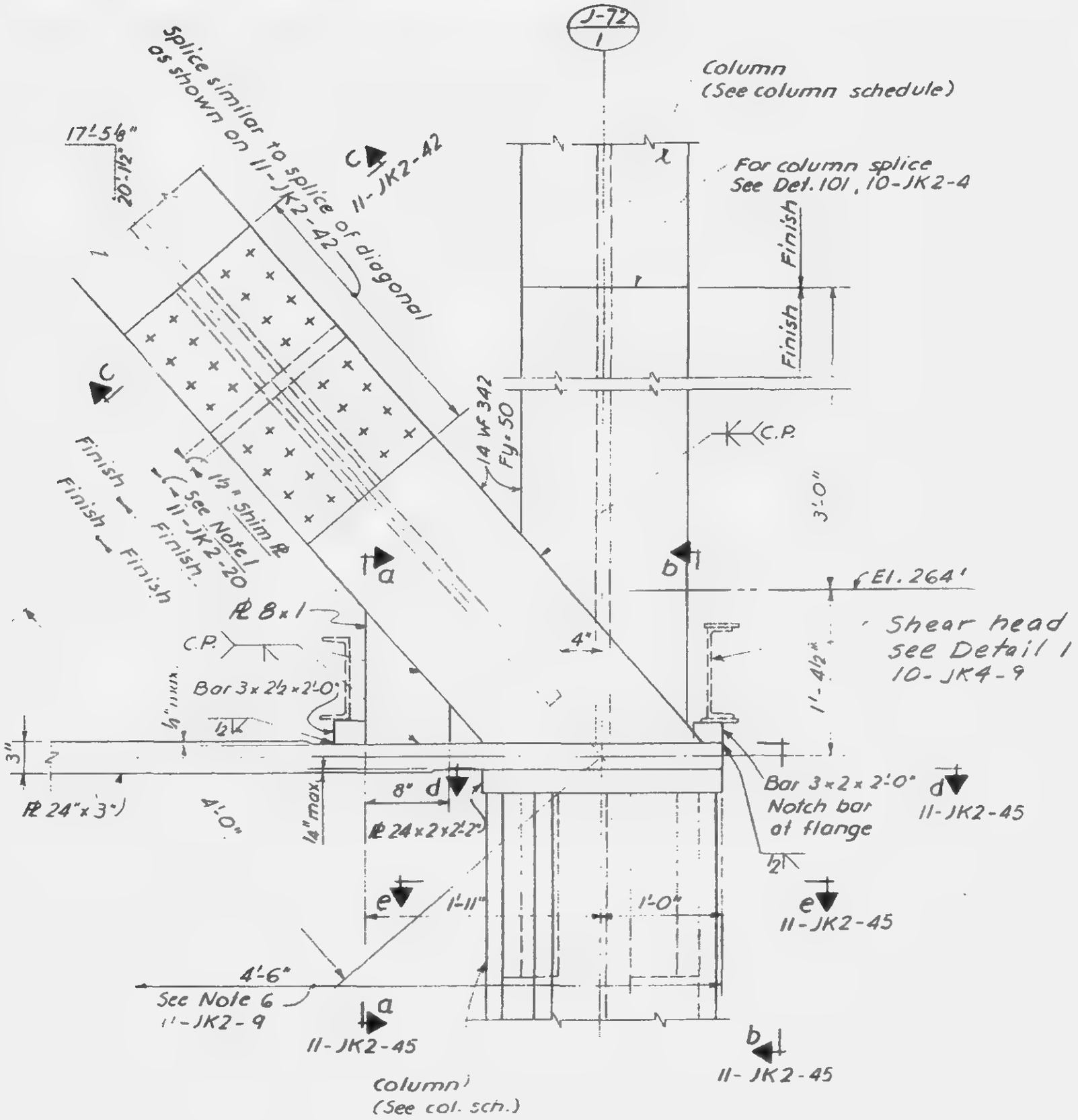

11-JK2-44

SKILLING - HELLE - CHRISTIANSEN - ROBERTSON — Structural & Civil Engineers

PROJECT: THE WORLD TRADE CENTER | TITLE: TRUSS DETAIL 33 | DATE: 5-1-68

REVISIONS

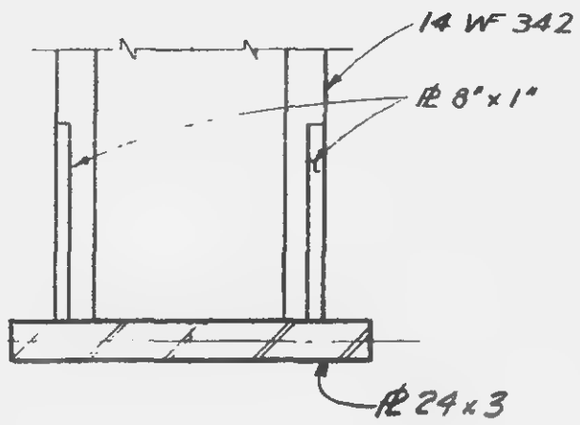

Section a-a

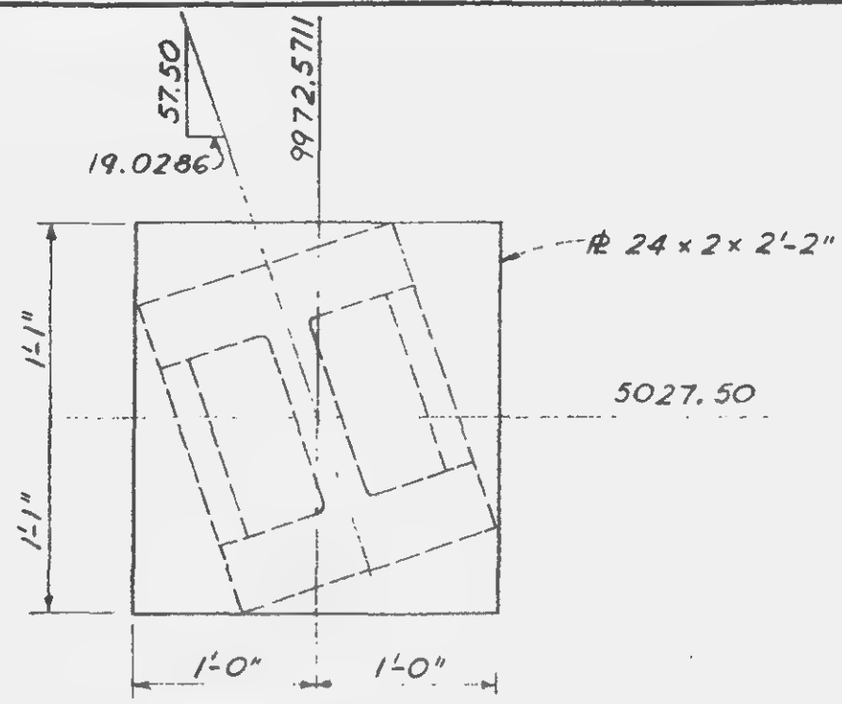

Section d-d

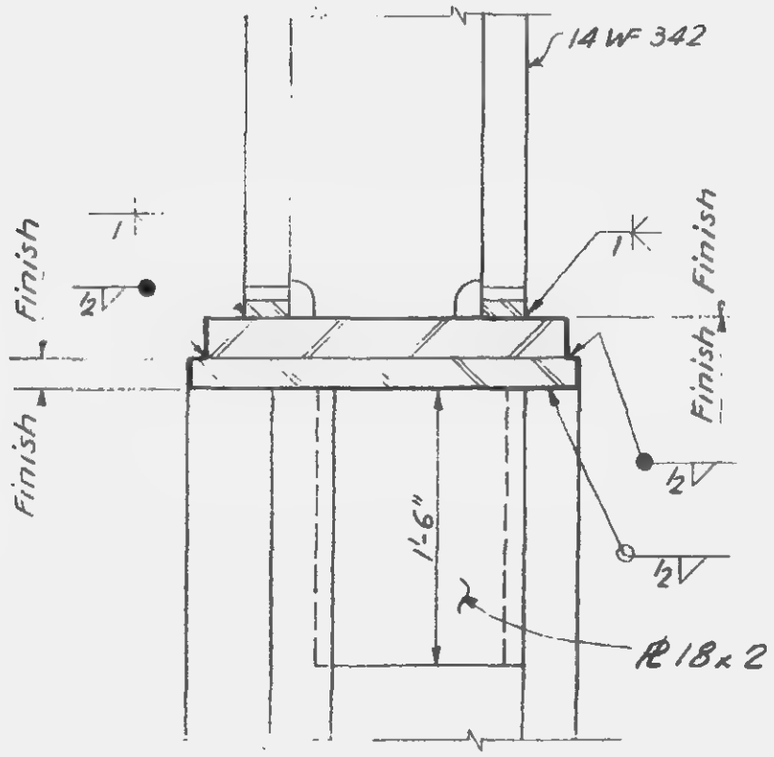

Section b-b

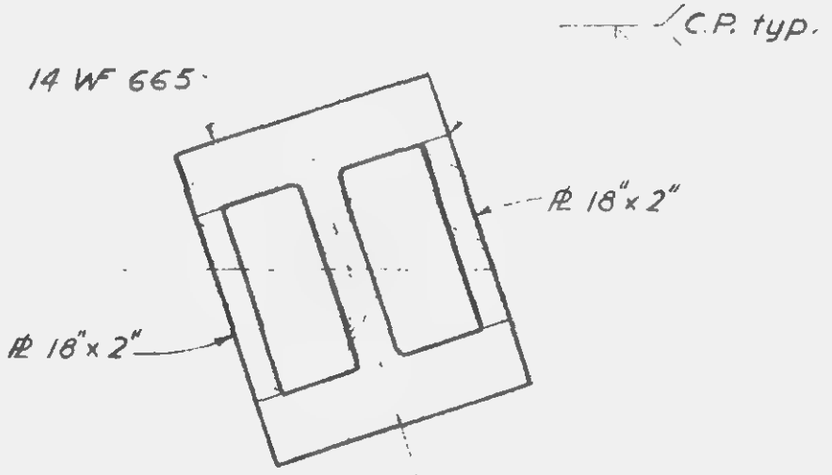

Section e-e

LICENSED PROFESSIONAL ENGINEER
LESLIE E. ROBERTSON
No. 54360
UNIVERSITY OF THE STATE OF NEW YORK

11-JK2-45

SKILLING - HELLE - CHRISTIANSEN - ROBERTSON — Structural & Civil Engineers

PROJECT THE WORLD TRADE CENTER | TITLE TRUSS DETAIL 34 | DATE 6-7-68

REVISIONS

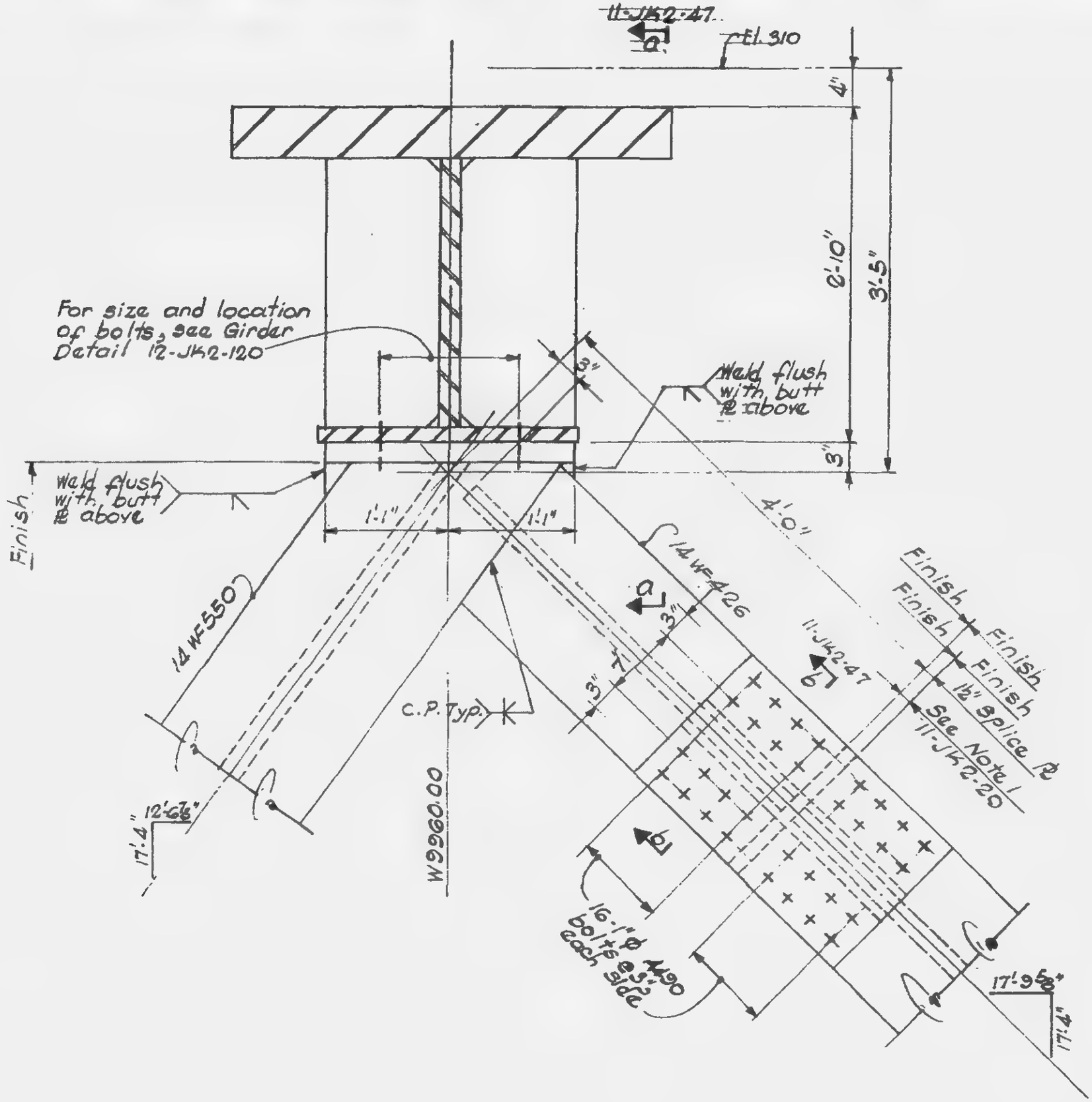

LICENSED PROFESSIONAL ENGINEER
LESLIE E. ROBERTSON
No. 24360
STATE OF NEW YORK

11-JK2-46

SKILLING - HELLE - CHRISTIANSEN - ROBERTSON Structural & Civil Engineers

PROJECT THE WORLD TRADE CENTER | TITLE TRUSS DETAILS | DATE 6-7-68

REVISIONS

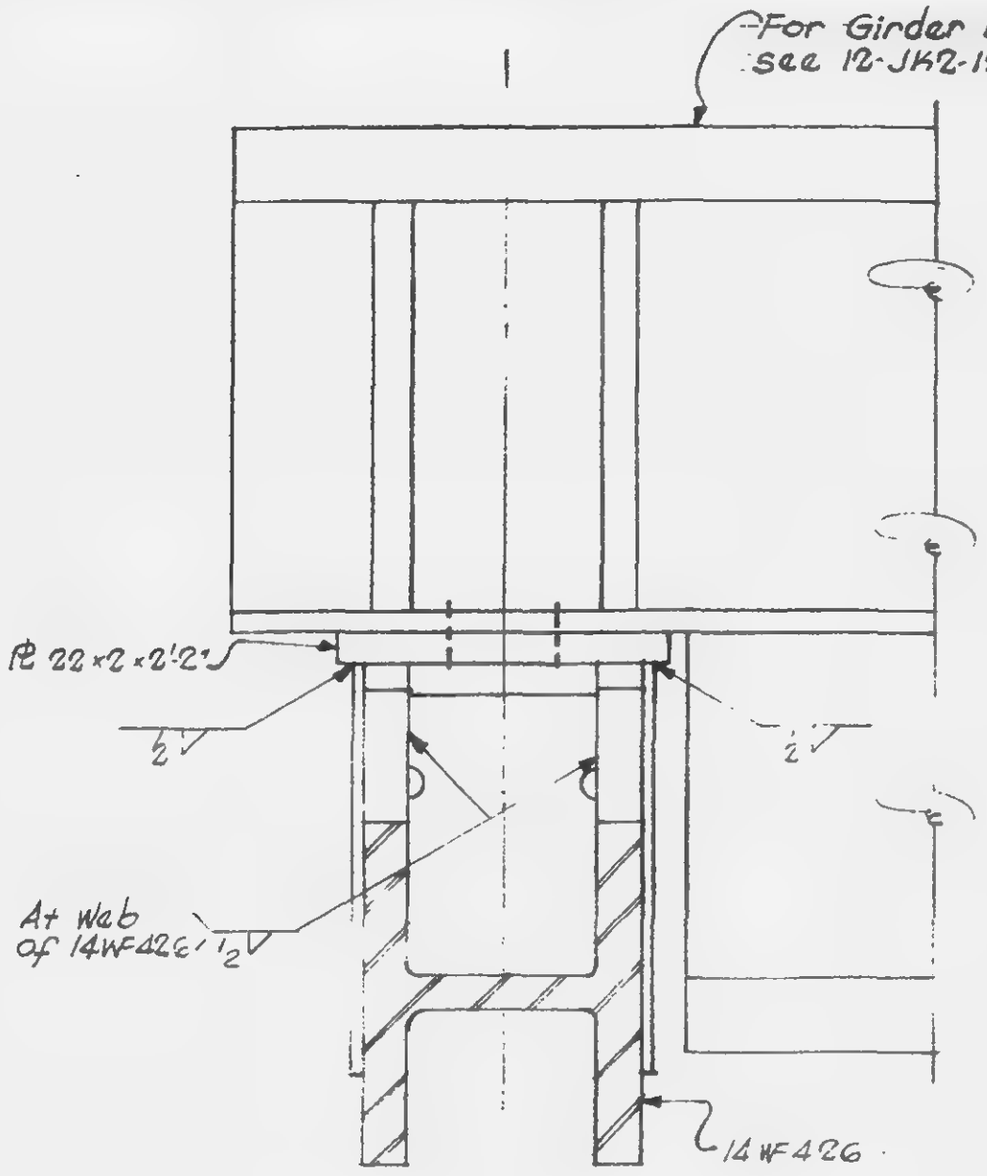

Section a-a

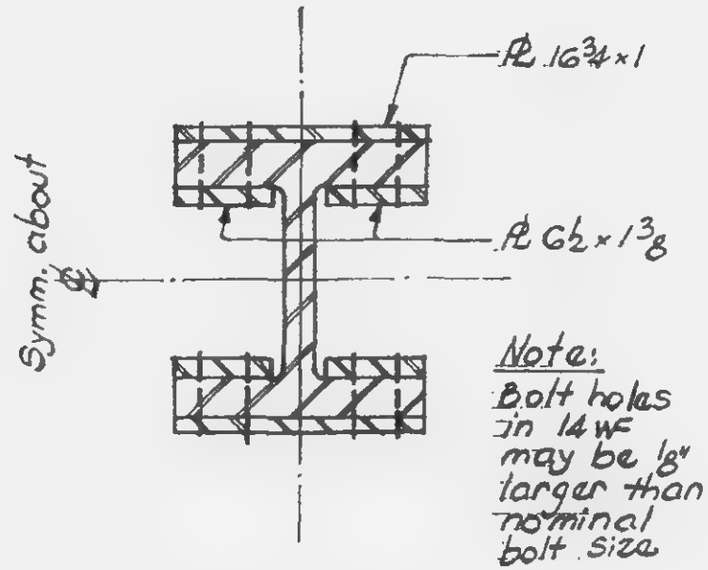

Note:
Bolt holes in 14WF may be ⅛" larger than nominal bolt size

Section b-b

LICENSED PROFESSIONAL ENGINEER
LESLIE E. ROBERTSON
No. 34360
OF THE STATE OF NEW YORK

1'-JK2-47

SKILLING - HELLE - CHRISTIANSEN - ROBERTSON — Structural & Civil Engineers

PROJECT THE WORLD TRADE CENTER | TITLE TRUSS DETAIL 35 | DATE 6-7-68

REVISIONS
12-3-68

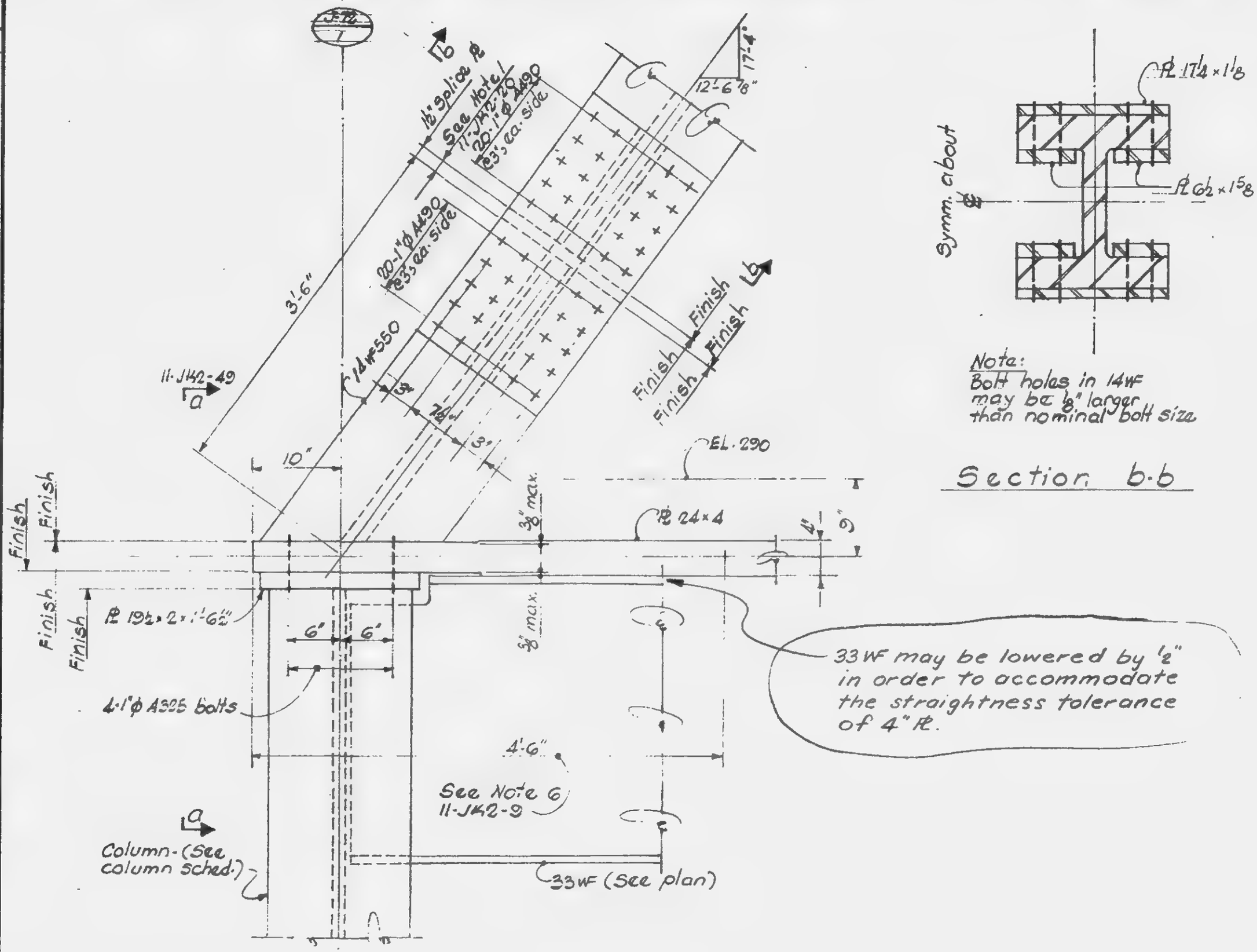

Note:
Bolt holes in 14WF may be ⅛" larger than nominal bolt size.

Section b-b

LESLIE E. ROBERTSON — LICENSED PROFESSIONAL ENGINEER — No. 34960 — UNIVERSITY OF THE STATE OF NEW YORK

11-JK2-48

SKILLING - HELLE - CHRISTIANSEN - ROBERTSON Structural & Civil Engineers

PROJECT THE WORLD TRADE CENTER | TITLE TRUSS DETAILS | DATE 6-7-68

REVISIONS

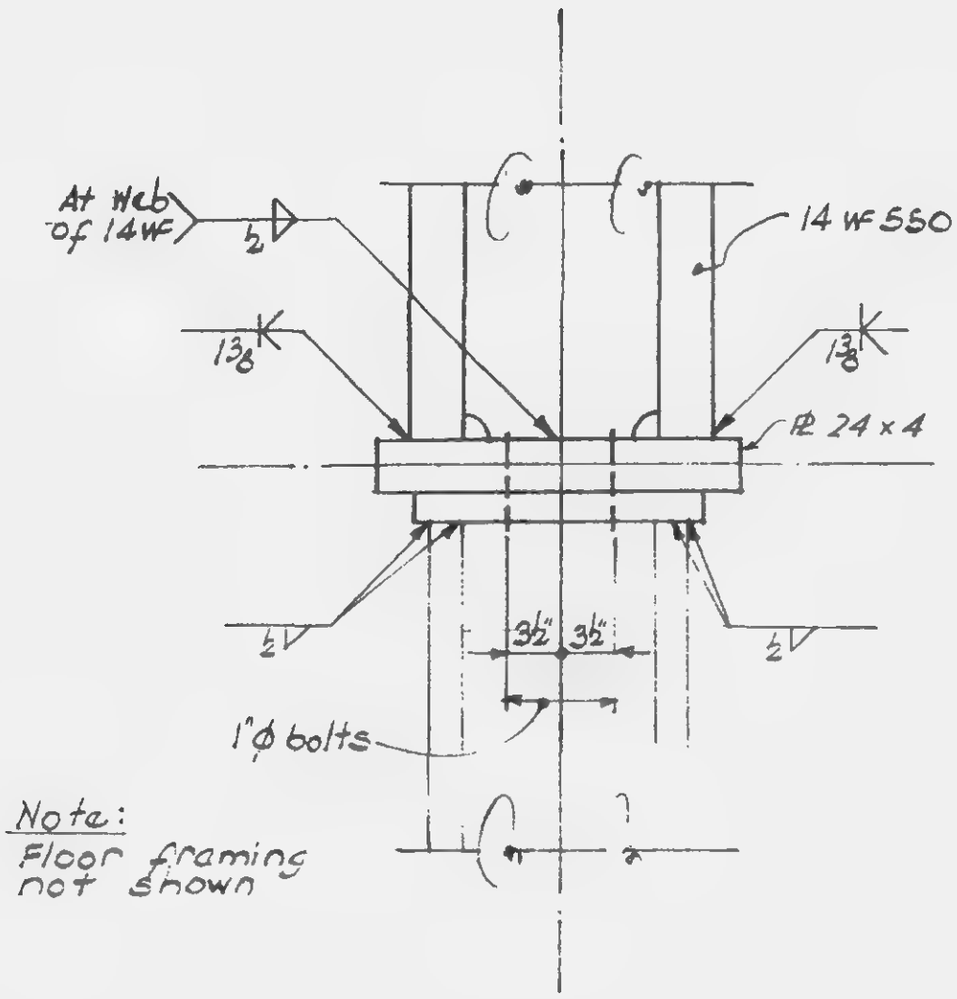

Section a-a

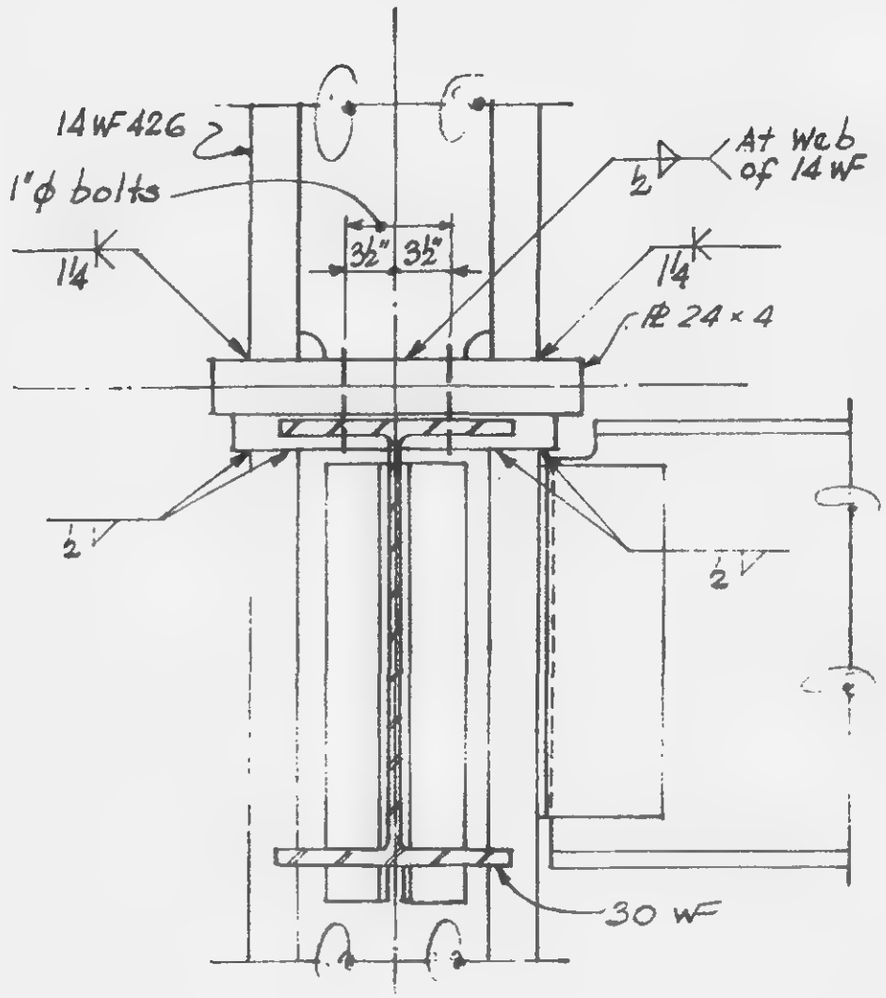

Section b-b

LICENSED PROFESSIONAL ENGINEER
LESLIE E. ROBERTSON
No. 34900
STATE OF NEW YORK

11-JA2-49

SKILLING - HELLE - CHRISTIANSEN - ROBERTSON Structural & Civil Engineers

PROJECT THE WORLD TRADE CENTER | TITLE TRUSS DETAIL 96 | DATE 6-7-68

REVISIONS

12-3-68

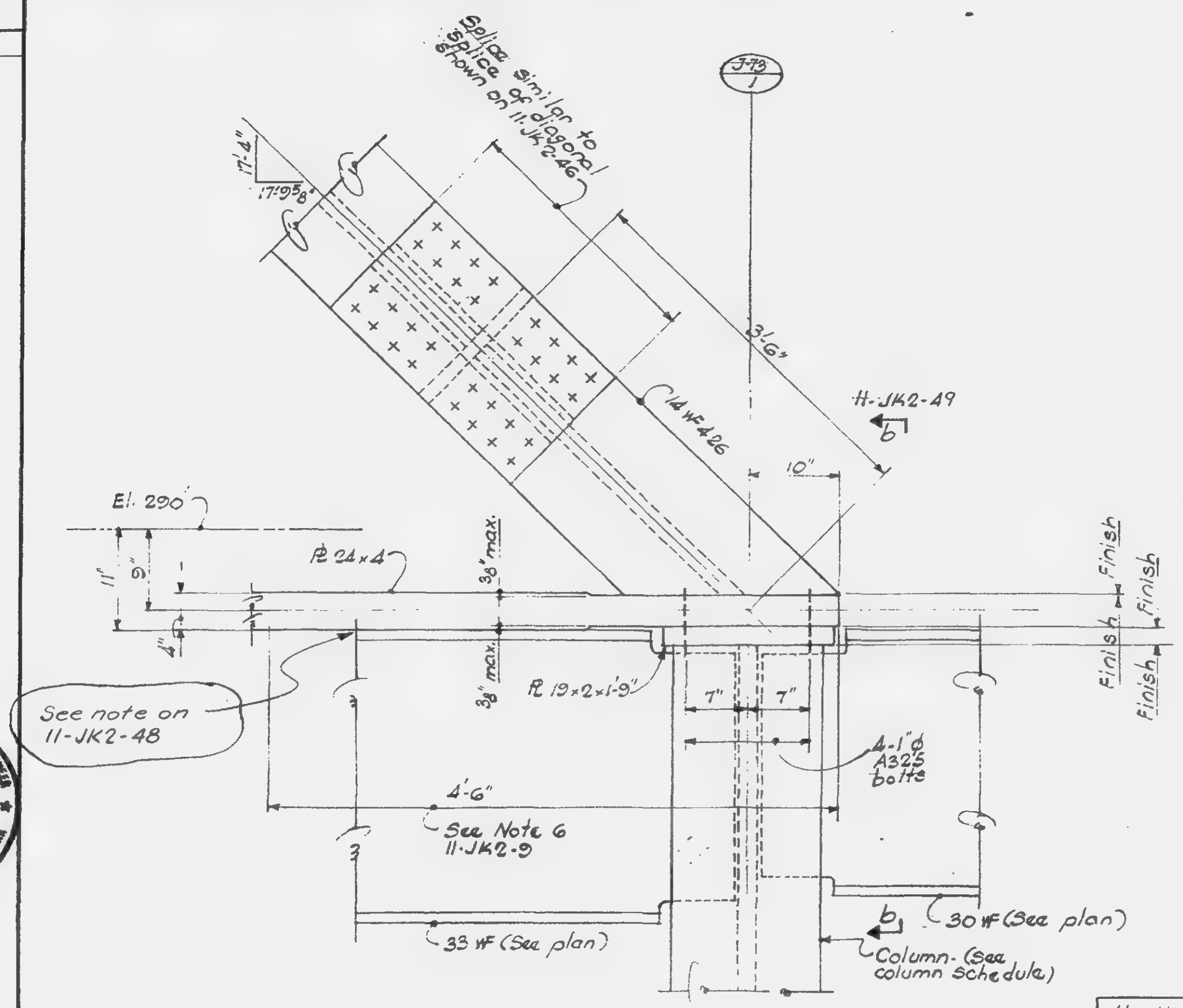

LICENSED PROFESSIONAL ENGINEER
LESLIE E. ROBERTSON
No. 34360
STATE OF NEW YORK

11-JK2-50

SKILLING - HELLE - CHRISTIANSEN - ROBERTSON Structural & Civil Engineers

PROJECT THE WORLD TRADE CENTER | TITLE TRUSS DETAIL 37 | DATE 6-7-68

REVISIONS

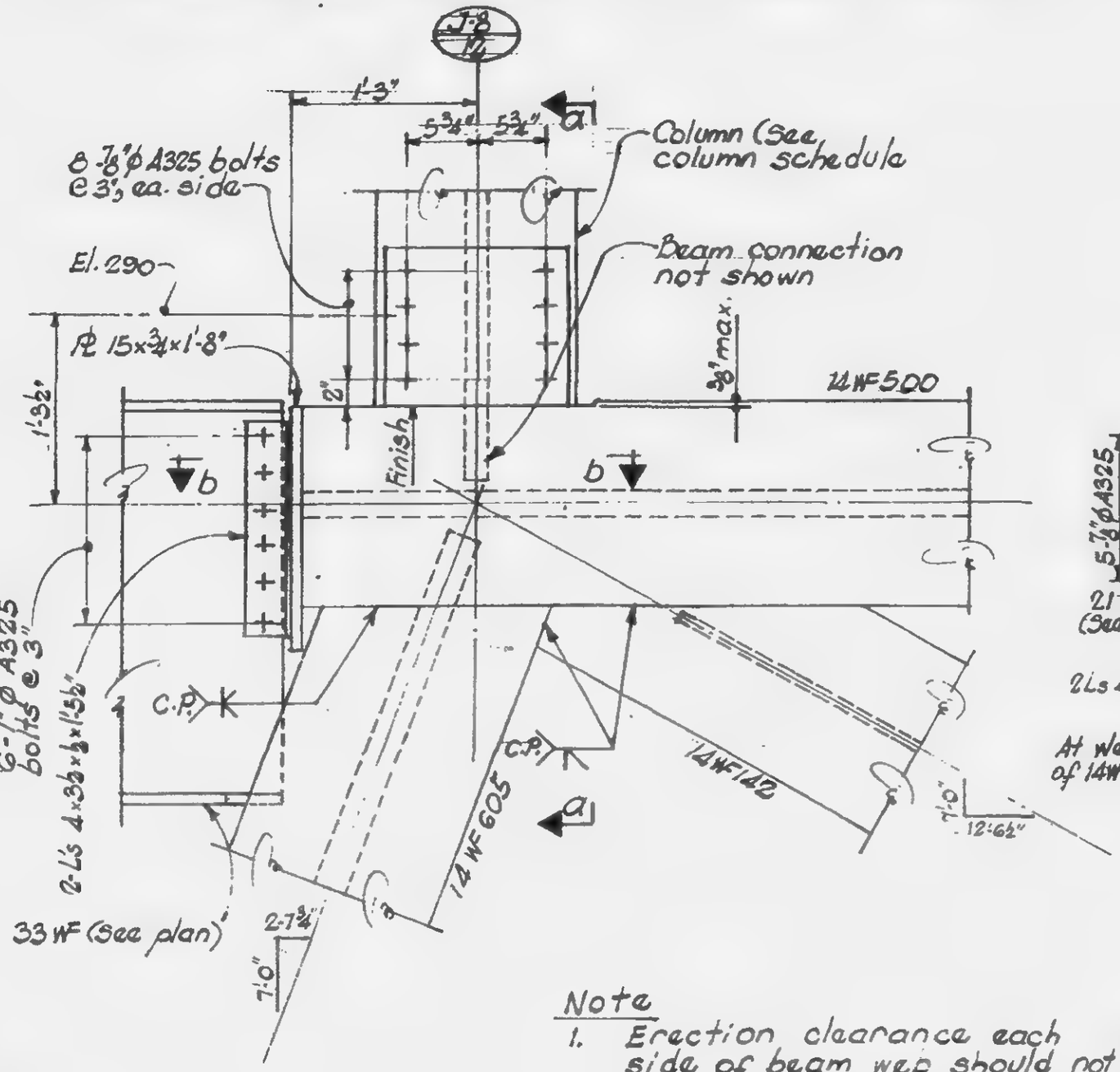

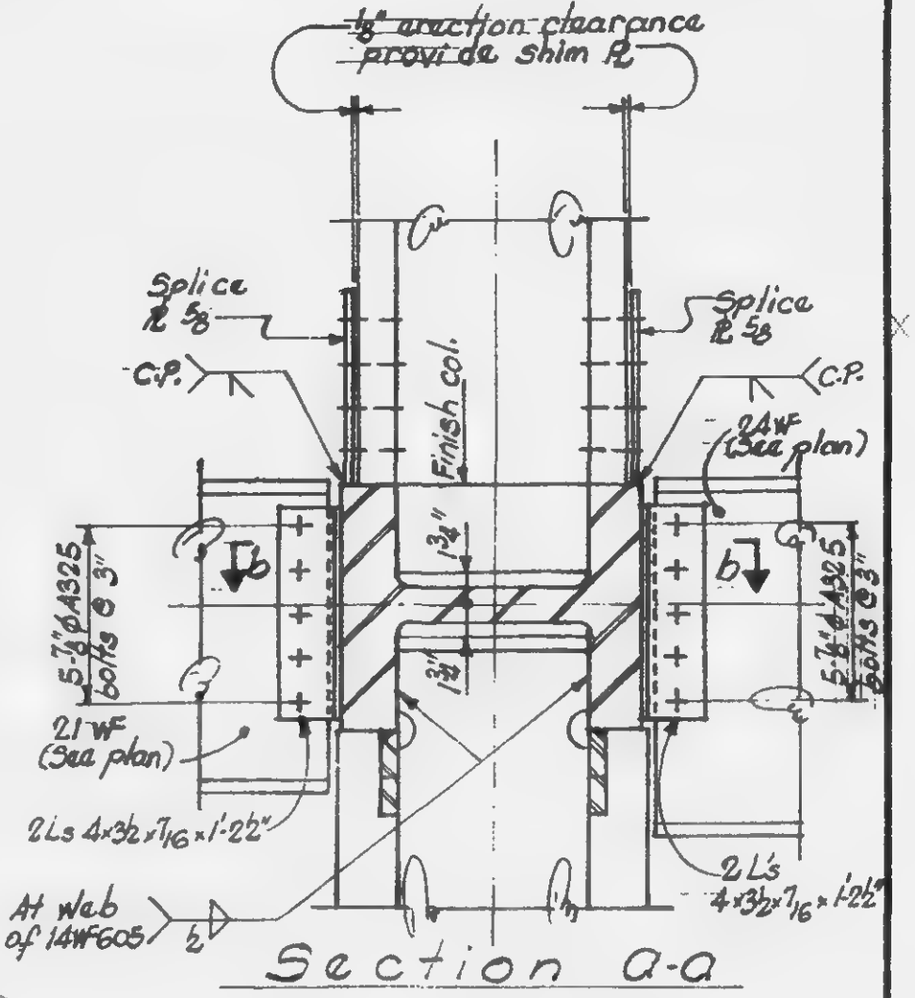

Section a-a

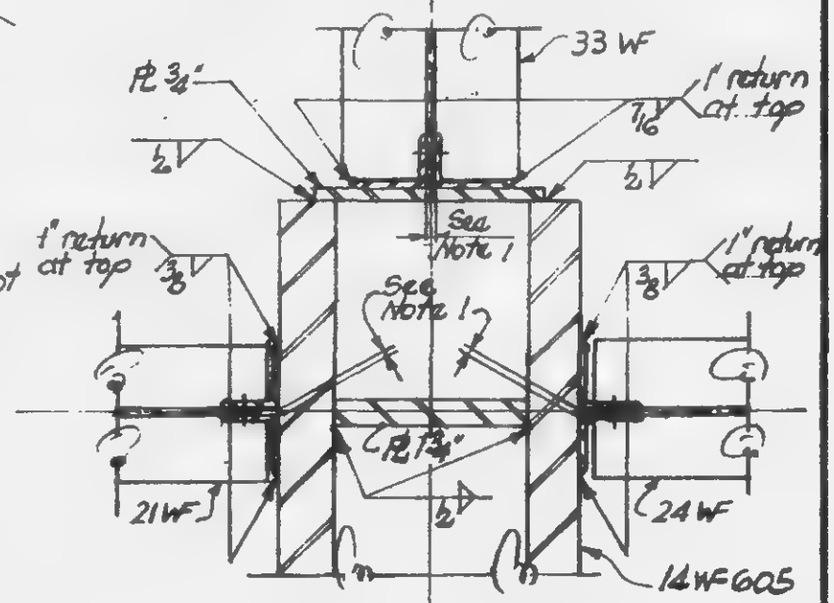

Section b-b

Note

1. Erection clearance each side of beam web should not be more than 1/16". Provide shim between beam web and angles if required to insure surface contact for H.S. bolts.

LICENSED PROFESSIONAL ENGINEER
LESLIE E. ROBERTSON
No. 34960
OF THE STATE OF NEW YORK

11-JK2-51

SKILLING - HELLE - CHRISTIANSEN - ROBERTSON — Structural & Civil Engineers

PROJECT: THE WORLD TRADE CENTER | TITLE: TRUSS DETAIL 38 | DATE: 6-7-68

REVISIONS

J-8 / 13

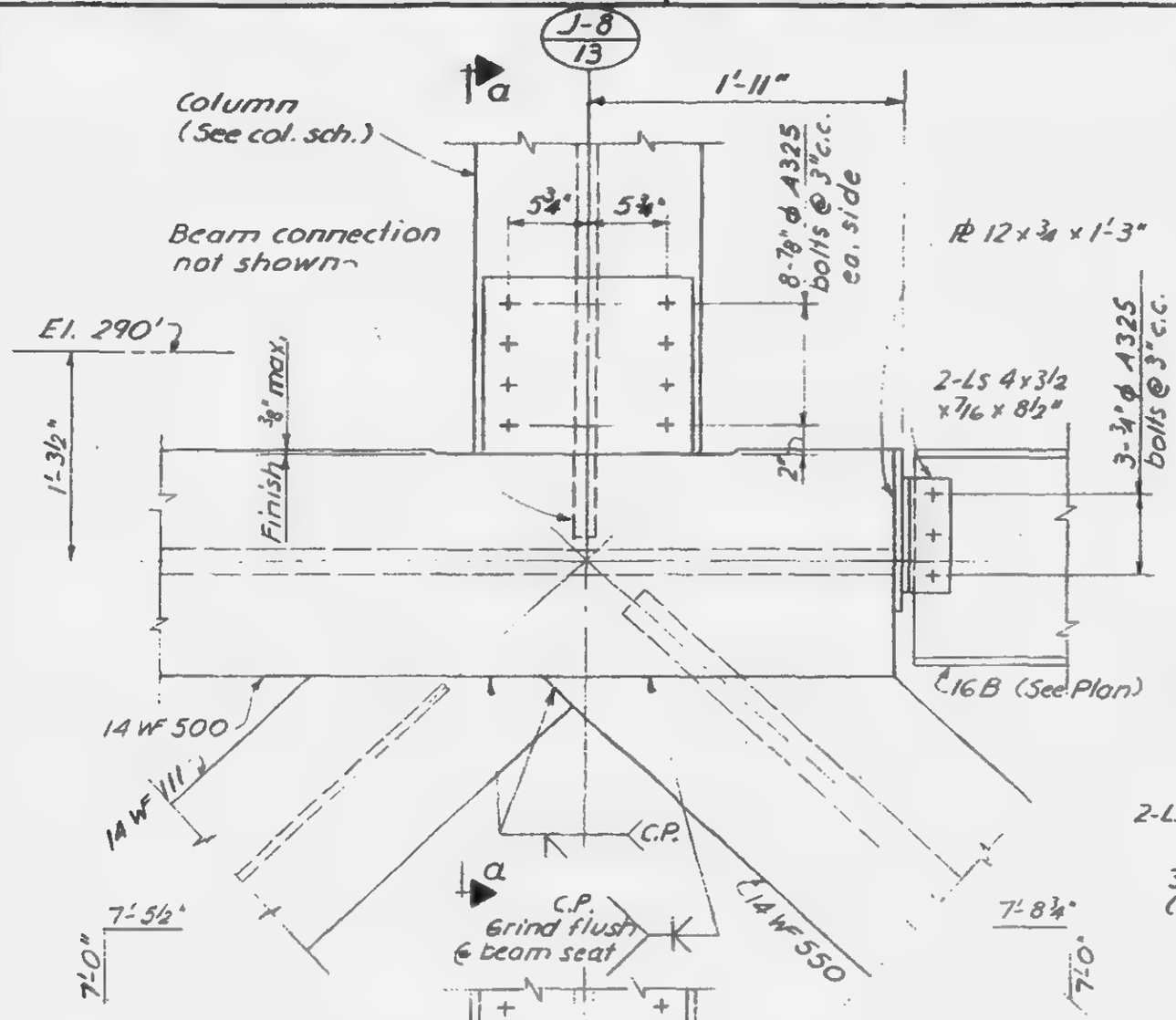

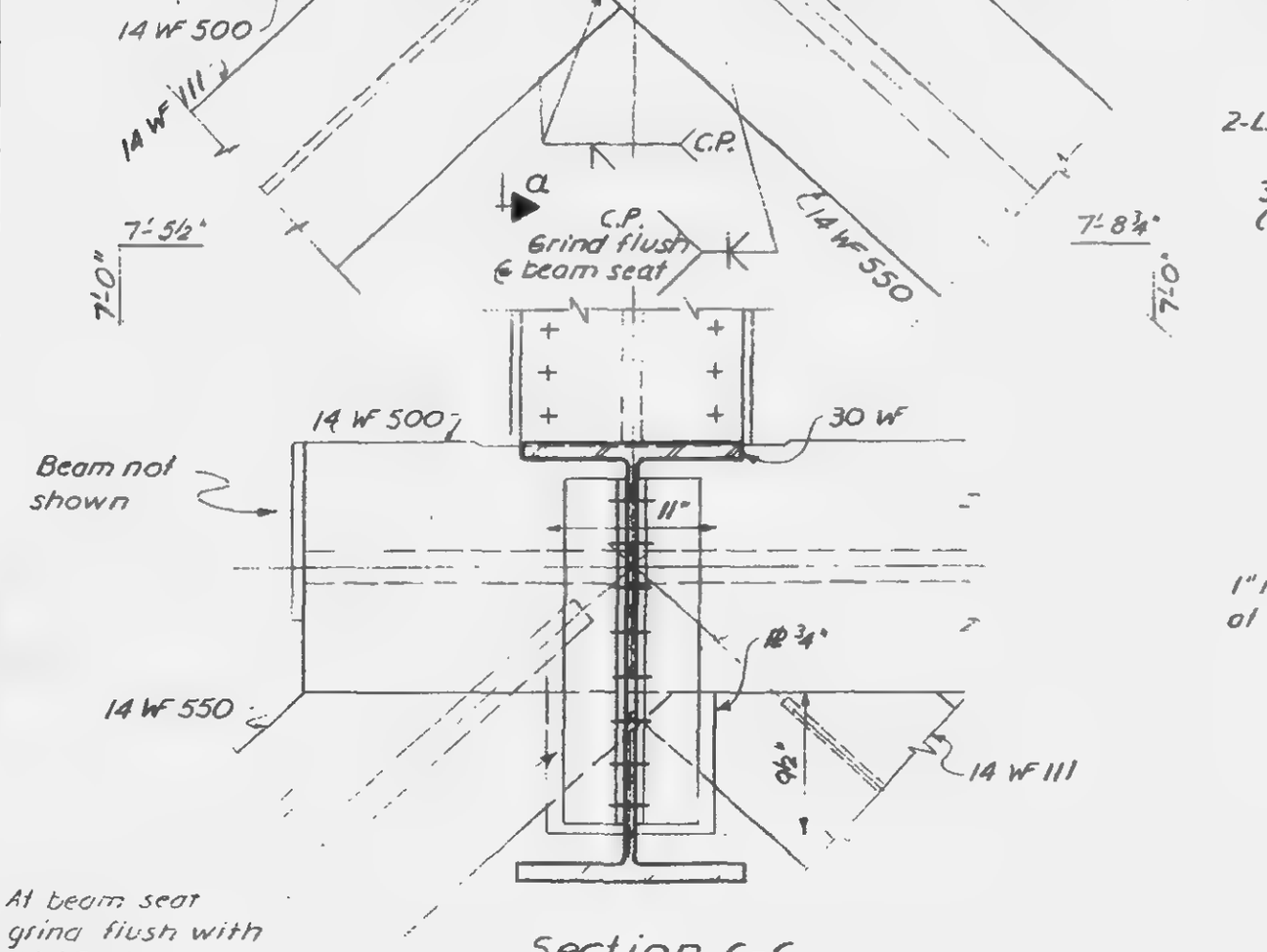

Section c-c

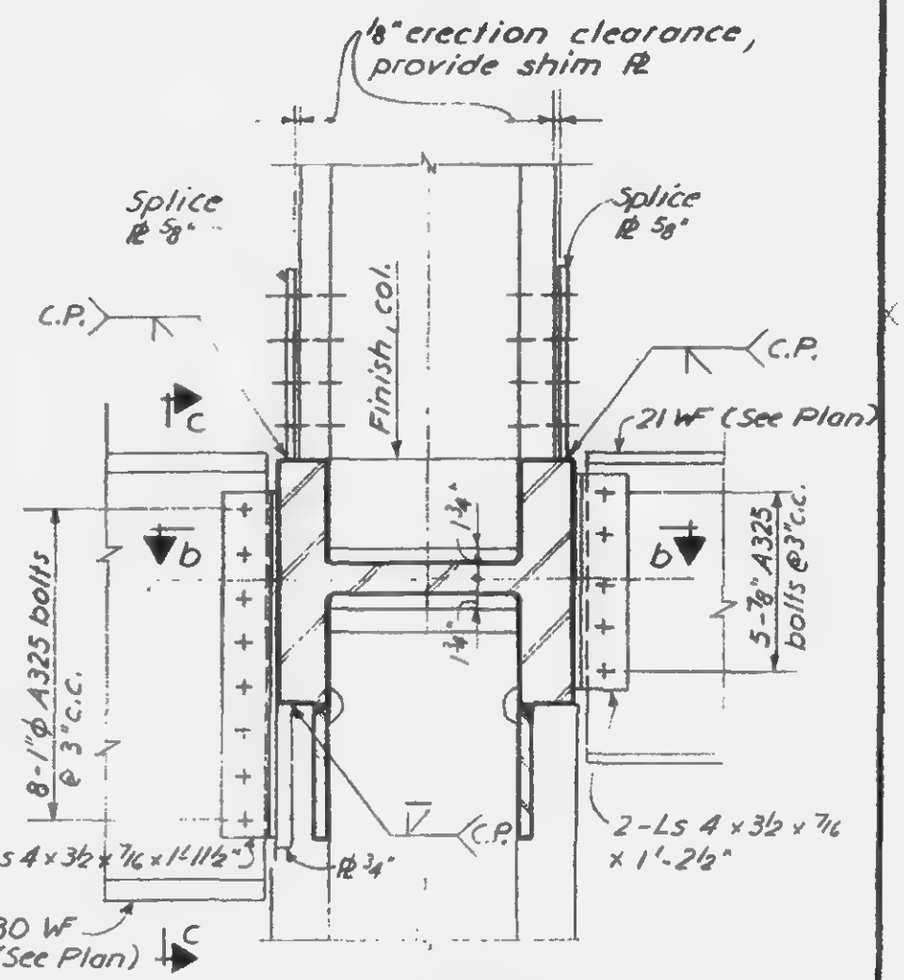

Section a-a

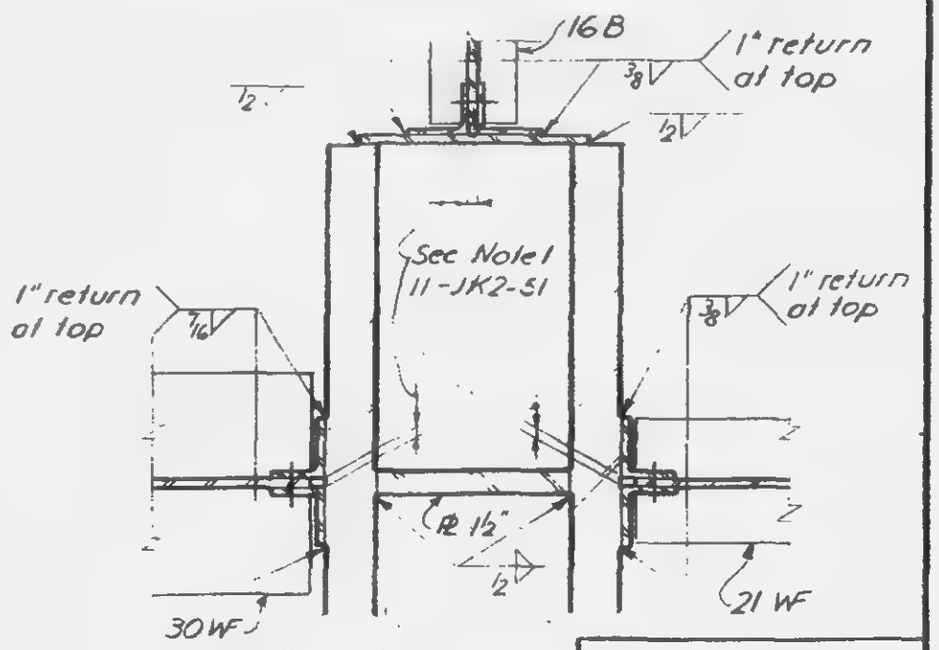

Section b-b

11-JK2-52

LICENSED PROFESSIONAL ENGINEER — LESLIE E. ROBERTSON — No. 34360 — STATE OF NEW YORK

SKILLING - HELLE - CHRISTIANSEN - ROBERTSON Structural & Civil Engineers

PROJECT THE WORLD TRADE CENTER | TITLE TRUSS DETAIL 39 | DATE 6-7-68

REVISIONS

J-72
2

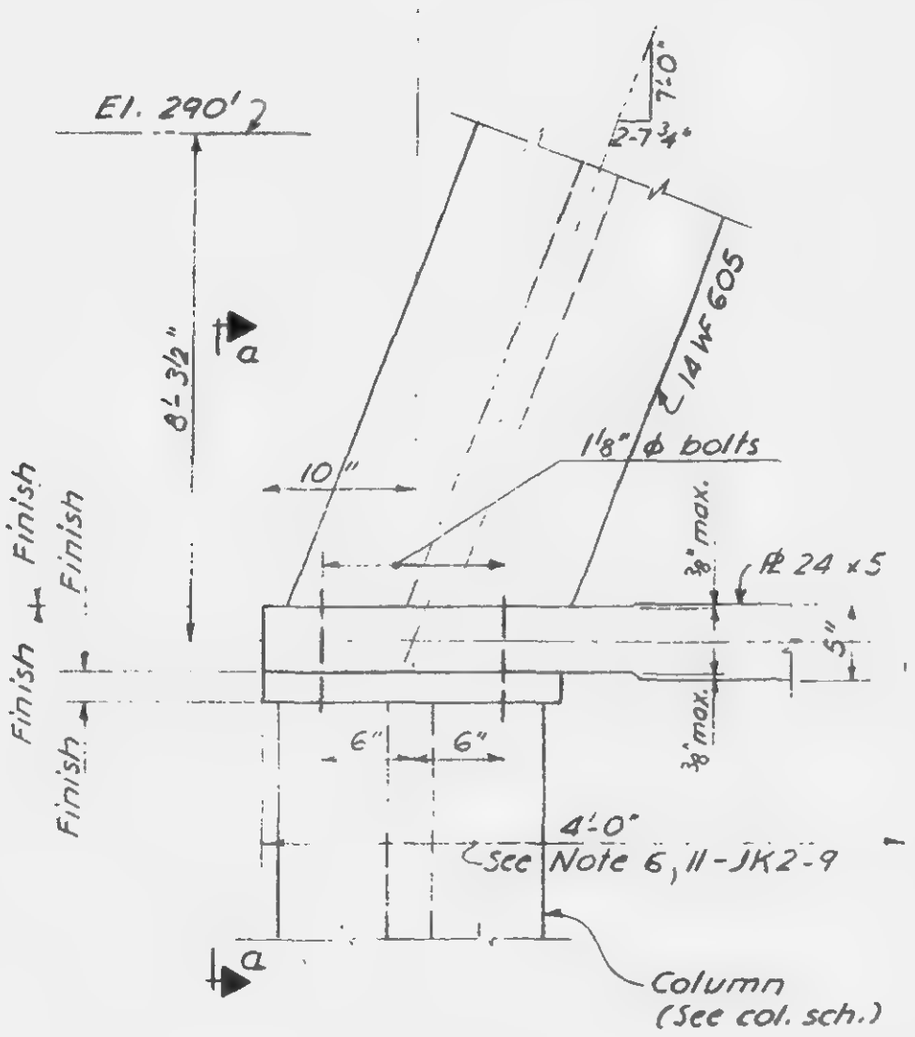

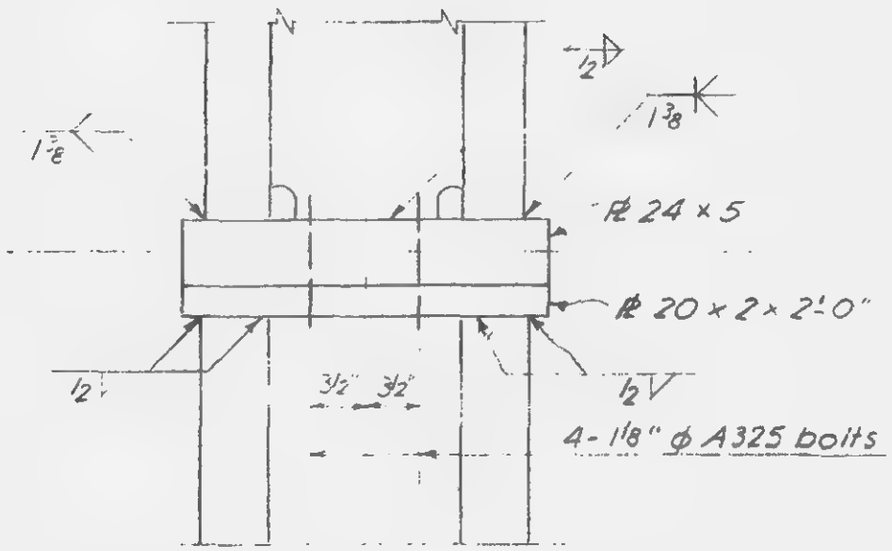

Section a-a

LICENSED PROFESSIONAL ENGINEER
LESLIE E. ROBERTSON
No. 34960
UNIVERSITY OF THE STATE OF NEW YORK

11-JK2-53

SKILLING - HELLE - CHRISTIANSEN - ROBERTSON Structural & Civil Engineers

PROJECT THE WORLD TRADE CENTER | TITLE TRUSS DETAIL 40 | DATE 6-7-68

REVISIONS

J-72
2

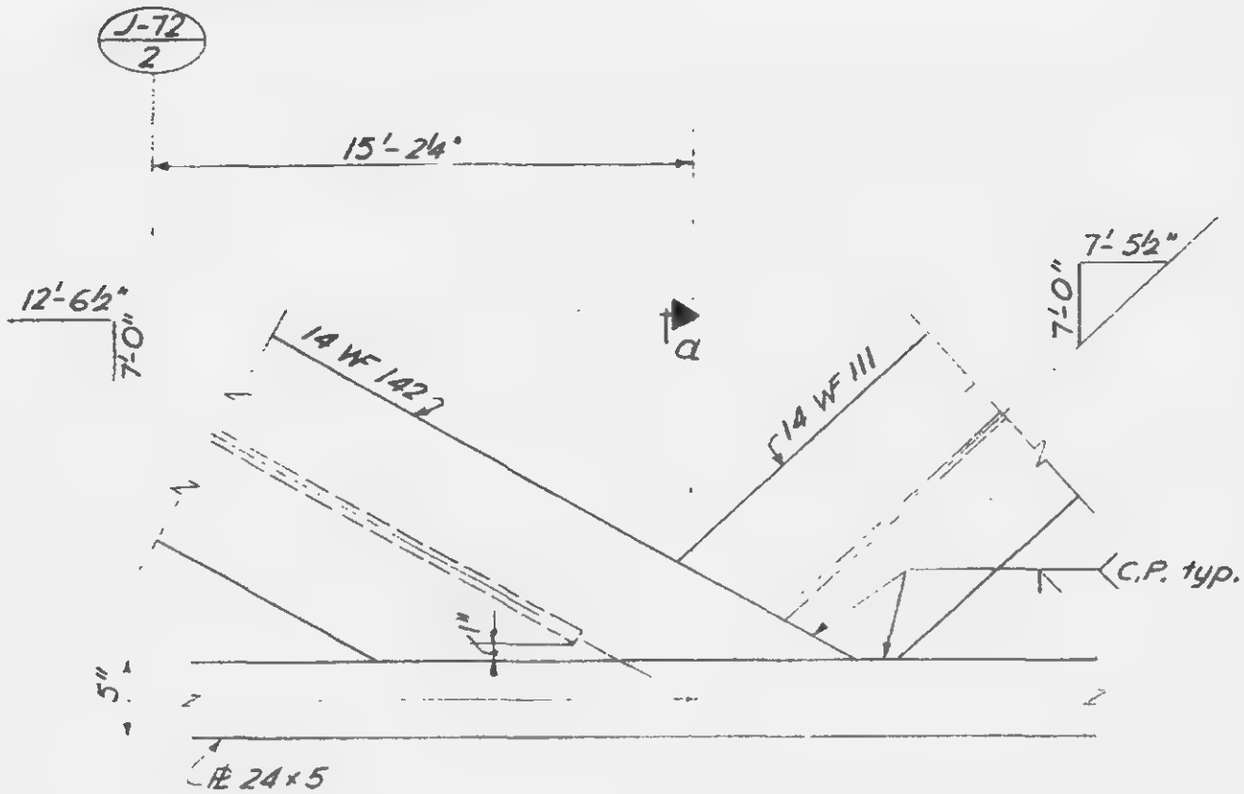

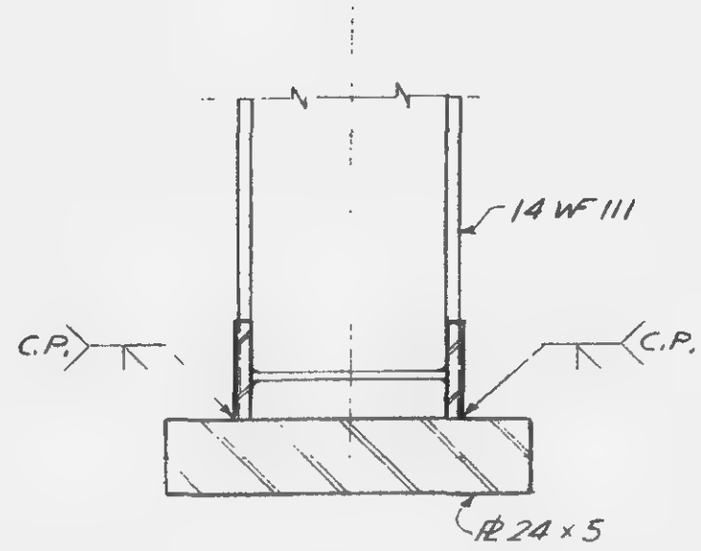

Section a-a

LICENSED PROFESSIONAL ENGINEER
LESLIE E. ROBERTSON
No. 34360
UNIVERSITY OF THE STATE OF NEW YORK

11-JK2-54

SKILLING - HELLE - CHRISTIANSEN - ROBERTSON Structural & Civil Engineers

PROJECT THE WORLD TRADE CENTER TITLE TRUSS DETAIL 41 DATE 6-7-68

REVISIONS

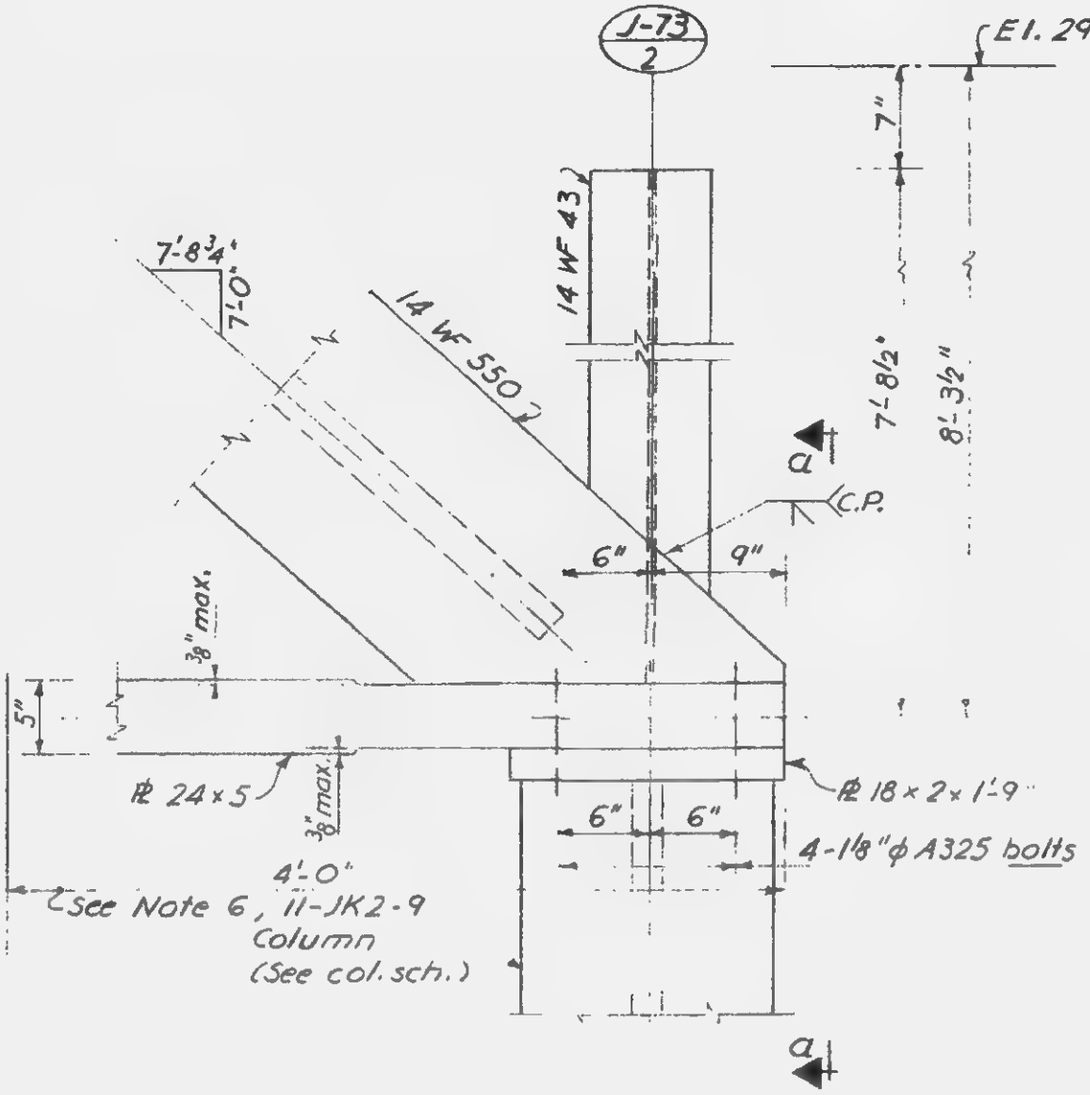

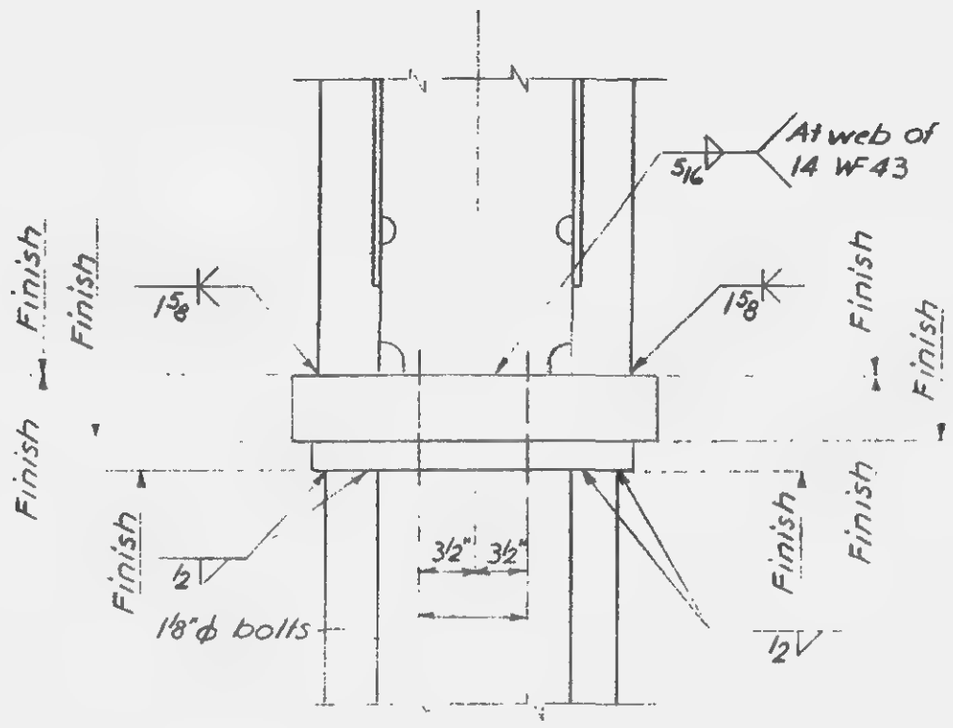

Section a-a

LICENSED PROFESSIONAL ENGINEER
LESLIE E. ROBERTSON
No. 34960
UNIVERSITY OF THE STATE OF NEW YORK

11-JK2-55

SKILLING, HELLE, CHRISTIANSEN, ROBERTSON — Structural & Civil Engineers

PROJECT THE WORLD TRADE CENTER | TITLE TRUSS DETAIL 42 | DATE 9-4-68

REVISIONS

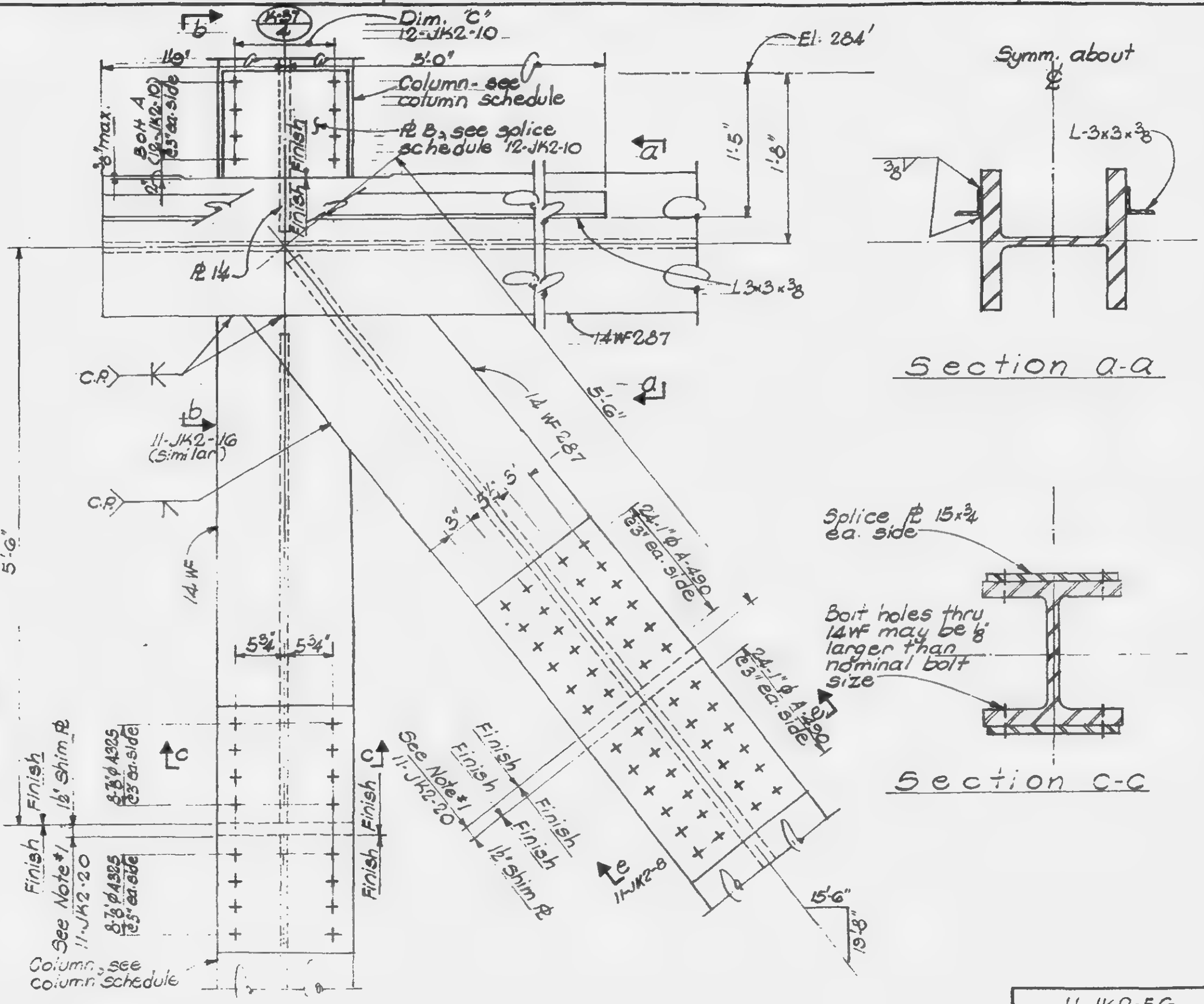

LICENSED PROFESSIONAL ENGINEER — LESLIE E. ROBERTSON — No. 34360 — UNIVERSITY OF THE STATE OF NEW YORK

DESIGNED

DRAWN

REVIEWED

11-JK2-56

SKILLING, HELLE, CHRISTIANSEN, ROBERTSON — Structural & Civil Engineers

PROJECT: THE WORLD TRADE CENTER | TITLE: TRUSS DETAIL 43 | DATE: 9-4-68

REVISIONS
10-15-68

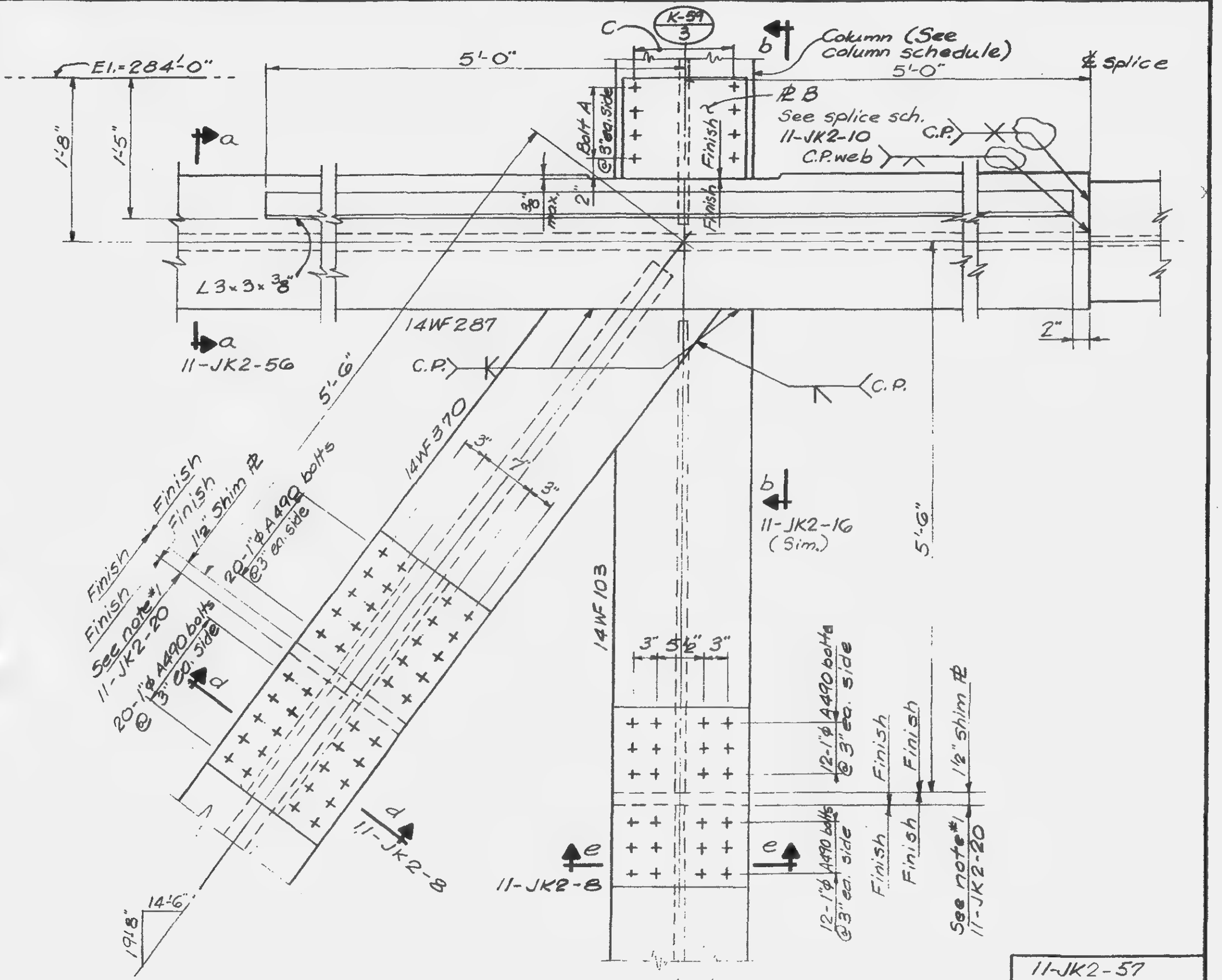

LICENSED PROFESSIONAL ENGINEER — LESLIE E. ROBERTSON — No. 34360 — UNIVERSITY OF THE STATE OF NEW YORK

DESIGNED

DRAWN

REVIEWED

11-JK2-57

SKILLING, HELLE, CHRISTIANSEN, ROBERTSON — Structural & Civil Engineers

PROJECT: THE WORLD TRADE CENTER | TITLE: TRUSS DETAIL 44 | DATE: 9-4-68

REVISIONS
3-21-69

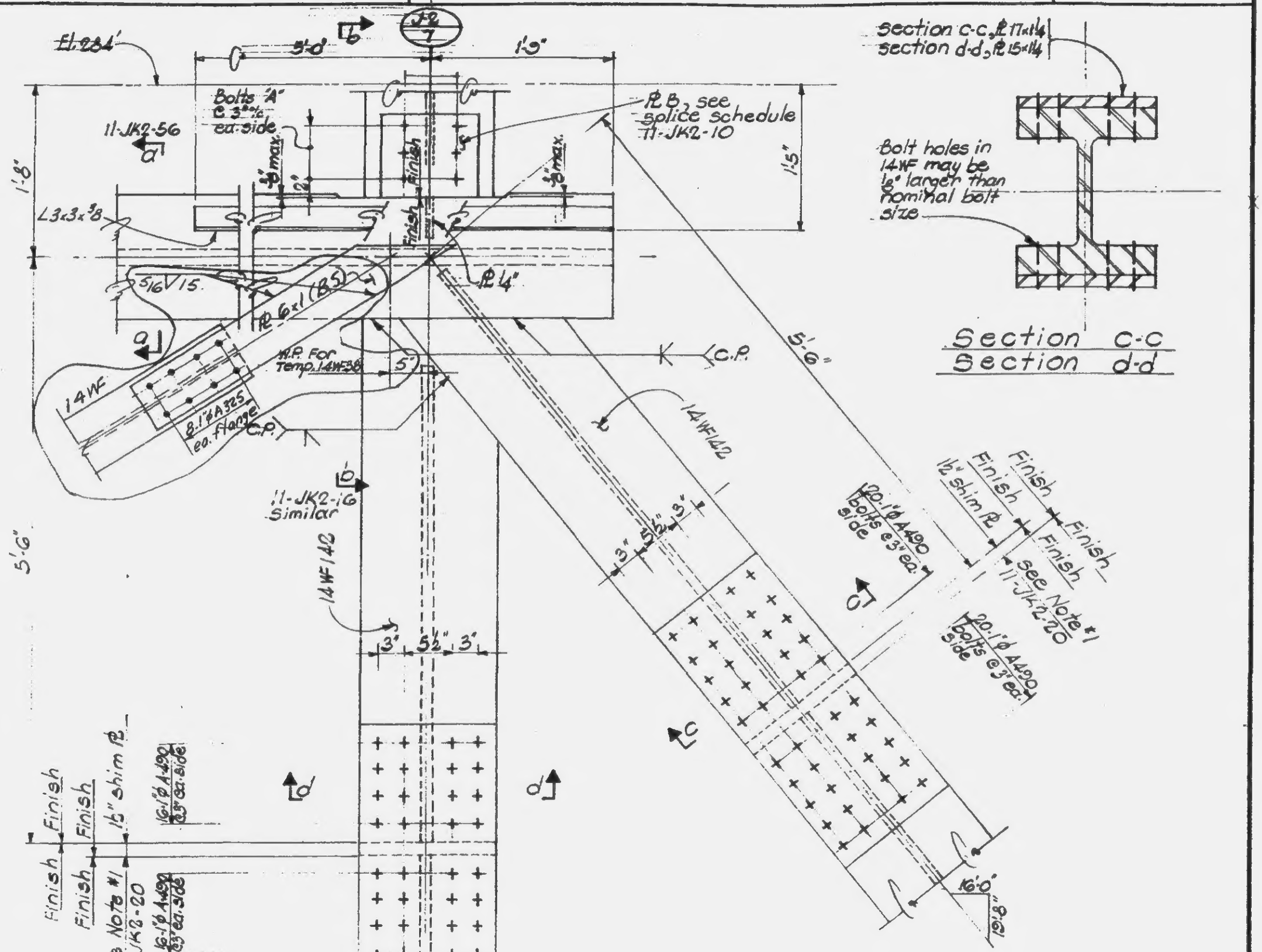

LICENSED PROFESSIONAL ENGINEER — LESLIE E. ROBERTSON — No. 34360 — UNIVERSITY OF THE STATE OF NEW YORK

DESIGNED
DRAWN S.C.
REVIEWED E.L.

11-JK2-58

SKILLING, HELLE, CHRISTIANSEN, ROBERTSON — Structural & Civil Engineers

PROJECT THE WORLD TRADE CENTER | TITLE TRUSS DETAIL 45 | DATE 9-4-68

REVISIONS

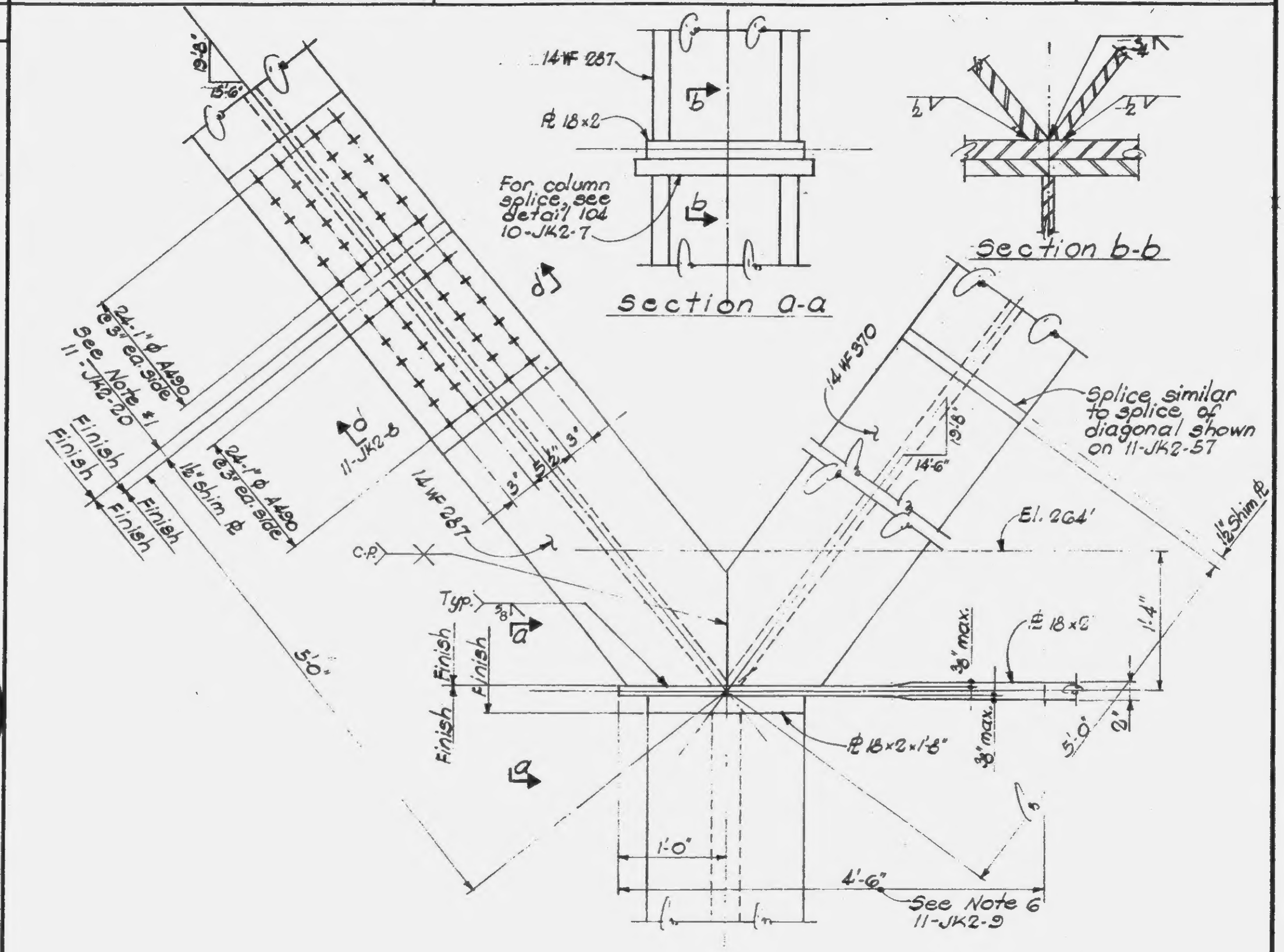

LICENSED PROFESSIONAL ENGINEER — LESLIE E. ROBERTSON — No. 34360 — UNIVERSITY OF THE STATE OF NEW YORK

DESIGNED

DRAWN

REVIEWED

11-JK2-59

SKILLING, HELLE, CHRISTIANSEN, ROBERTSON — Structural & Civil Engineers

PROJECT THE WORLD TRADE CENTER | TITLE TRUSS DETAIL 46 & 47 | DATE 9-4-68

REVISIONS
1-8-69
3-21-69

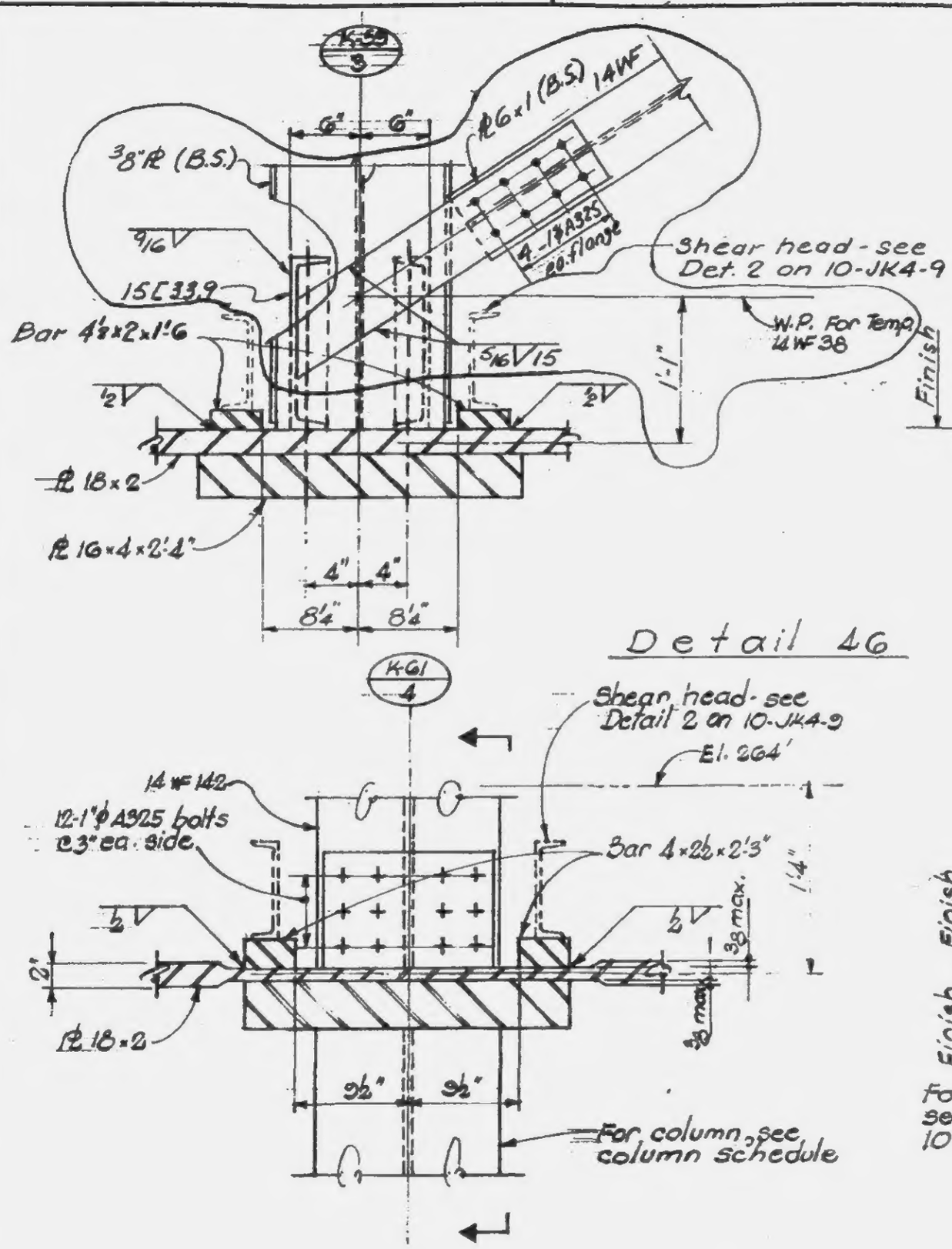

LICENSED PROFESSIONAL ENGINEER — LESLIE E. ROBERTSON — NEW YORK

12-24-68
DESIGNED

DRAWN
S.C

REVIEWED
E.L.

11-JK2-60

SKILLING, HELLE, CHRISTIANSEN, ROBERTSON — Structural & Civil Engineers

PROJECT THE WORLD TRADE CENTER | TITLE TRUSS DETAIL 48 | DATE 9-4-68

REVISIONS

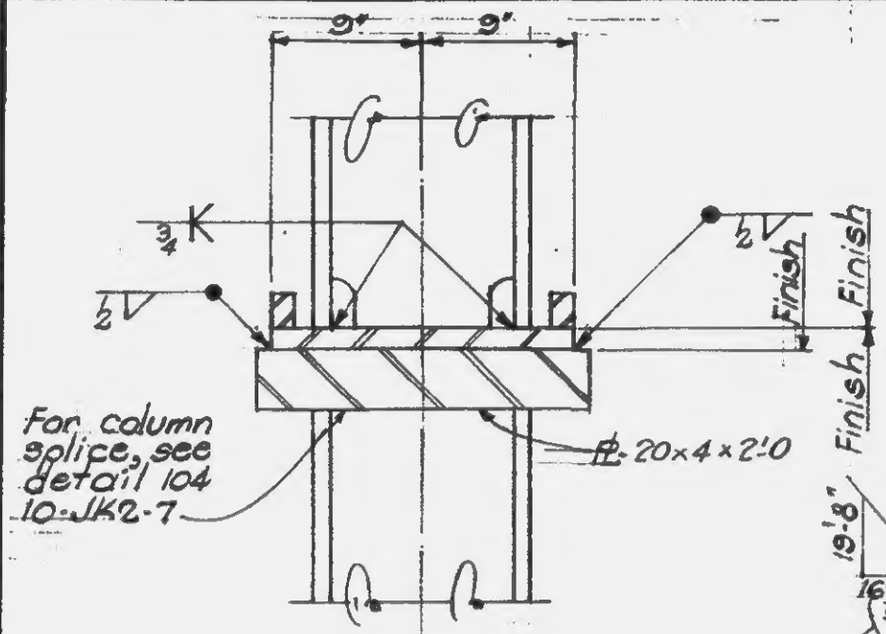

Section a-a

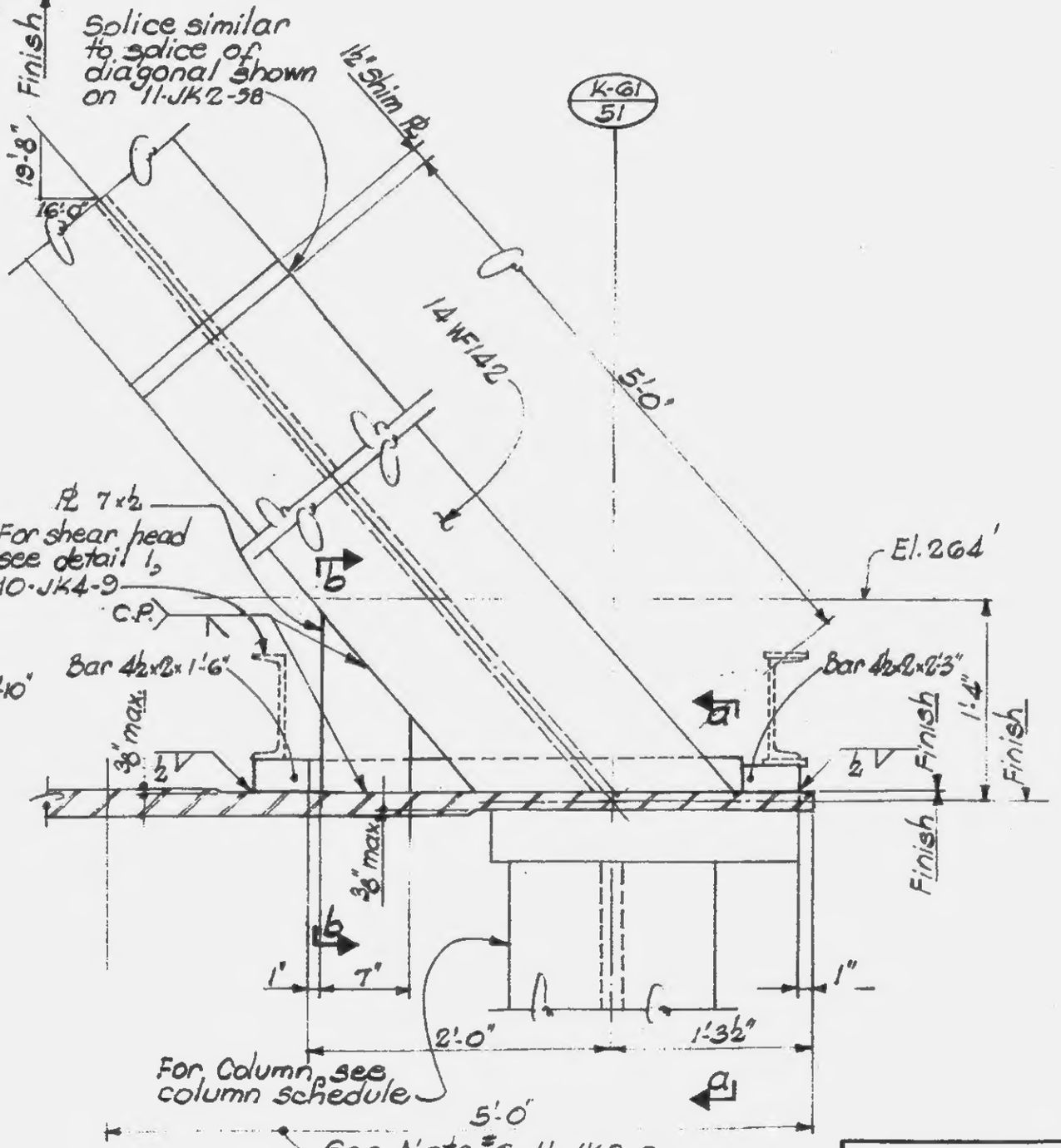

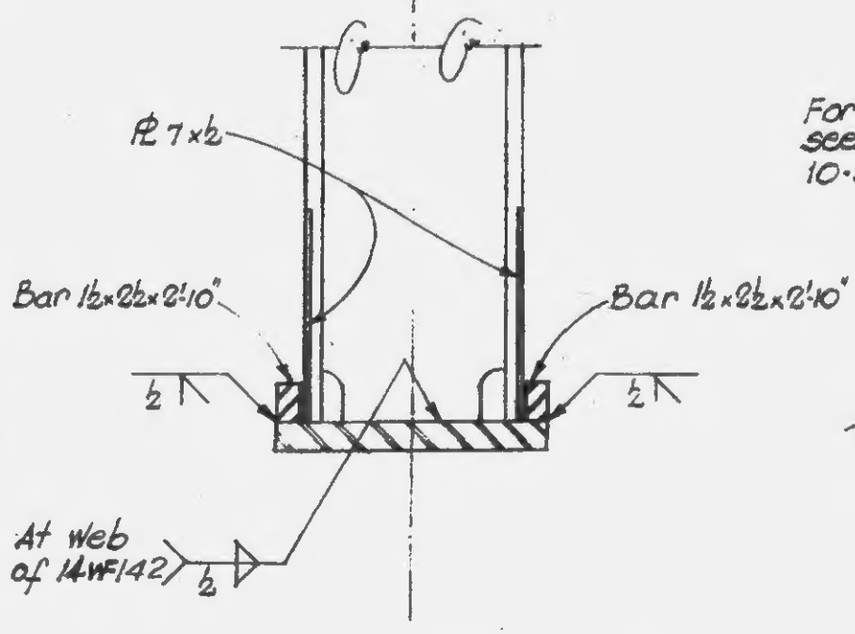

Section b-b

DESIGNED

DRAWN

REVIEWED

11-JK2-61